FAHRION® PRÄZISION

AND ALL RUNS SMOOTHLY – 111 YEARS – EXPERIENCE

CENTRO|P premium
CLAMPING SYSTEMS FROM FAHRION

HORN

CENTRO|P premium
Consistently One Step Ahead

FAHRION
Protect

Welcome to the world of high-precision machining with customer benefits, where we are always looking to improve.

As part of our CENTRO|P premium program, we offer you customised clamping systems, each with its own individual strengths and for a variety of applications.

Take advantage of other benefits, such as our FAHRION | Protect coating, tried and tested a million times, which is now also used on chucks and on clamping nuts. Pioneering technology that protects your complete tool clamping system and keeps it accurate and efficient for a long time.

UPC, ULTRA POWER CHUCK

For Maximum Material Removal Rates

The **UPC Ultra Power Chucks** are extremely stiff precision chucks for the most demanding tasks with predominantly radial load. This is a reinforced version with a multi-part clamping nut for optimised damping and maximum stability. The wall thickness of the chuck body was increased to resolve more radial force and suppress vibration.

UPC, ULTRA POWER CHUCK
Features

- Optimal clamping force to eliminate collet twist
- Stable construction to reduce vibration build up
- Maximum dampening for vibration suppression
- Positive locking on the weldon surface to prevent micro creep
- New reinforced clamping nut with fine trapezoidal thread for improved locking
- The UPC reinforced chuck body for high radial loads is offered in a short version only. If longer reach is required use the FPC chuck

The problem

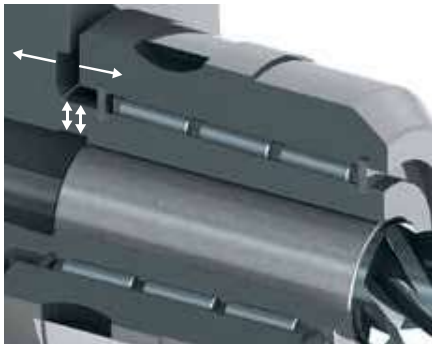

Conventional power chuck -
high radial transmittable torque -
unstable / weakened - only limited
radial load capacity

The solution

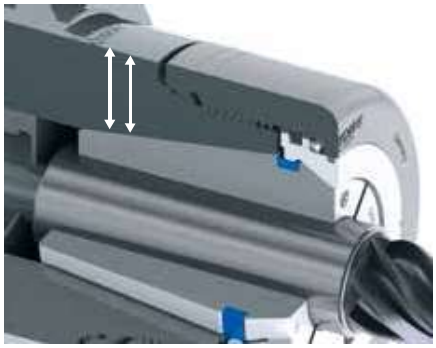

FAHRION UPC -
stable basic body for increased radial
load and additional safety due to
mechanical pull-out protection

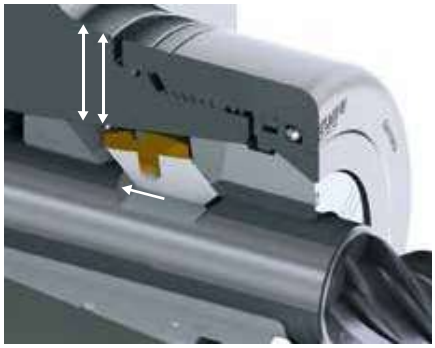

FAHRION UPC -
stable basic body for increased radial
load with GERC-HP collets

UPC, ULTRA POWER CHUCK

Ultra Power thanks to Angular Contact Ball Bearings and a Fine Thread

- New design of the clamping nut with an angular contact ball bearing and a compensating ring
- Special design with new trapezoidal fine thread and reinforced outer geometry for even better tightening of the clamping nut
- The ring allows clamping of the collet without radial forces. When tightening, the pressure on the collet is exerted only in the axial direction from top to bottom
- The multi-part nut increases the vibration damping.
- The tightening torques are identical to those of the PREMIUM DPC series
- As a result, the UPC clamping nut achieves a resultant clamping force of between 350 Nm and 380 Nm, more than sufficient, e.g. to secure a wedge collet with pull-out protection against twisting.

Conventional deep groove ball bearings:
Force flow during clamping (red) or release (blue) is transmitted exclusively via balls and bearing shells

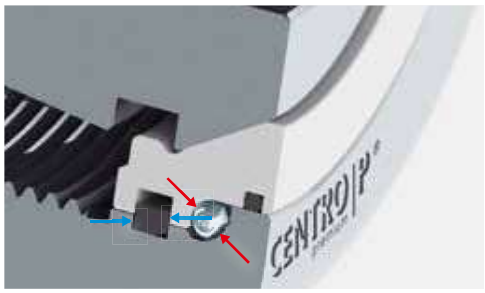

Angular contact ball bearings at UPC:
Power flow during clamping (red) is transmitted via the balls, when releasing (blue) via the circlip

Coolant supply variants through the matching collet
One system, several variants. The choice of collet determines the type of coolant supply. For you this means:

- Better surface quality
- Longer tool life
- Easy chip removal
- Cooling and lubricating of the tool cutting edge

Without coolant supply
GERC-HP
GERC-B

Coolant through the centre
GERC-HPD
GERC-BD
GERC-GBD

Peripheral cooling
GERC-HPDD
GERC-GBDD

Process optimisation NEW

Optimise your process and inquire about our collets with customised jet holes. Starting at 0.2 mm outlet diameter, jet holes can be designed for specific applications, e.g. for cryogen or aerosol cooling.

UPC, ULTRA POWER CHUCK

Overview

Interface:	Collets:	Clamping Nuts:

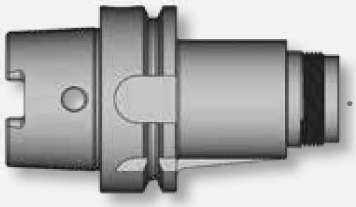

Cylindrical or tapered version available

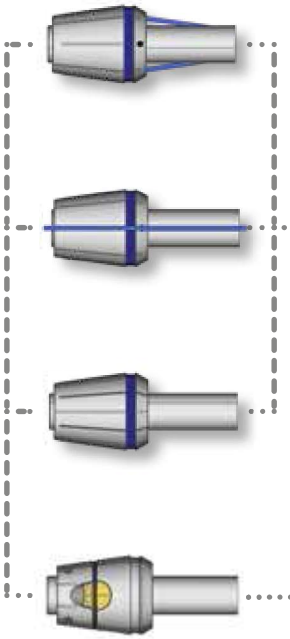

3 µm at 3xD with HP collets and UPC clamping nut
6 µm at 3xD with B collets and UPC clamping nut

UPC

UPC

4 µm at 3xD with W collets
and UPC clamping nut

- CAT40 / CAT50
- HSK-A 63
- HSK-A 100
- SK 40
- SK 50
- BT 40 / BTP 40
- BT 50 / BTP 50
- PSC 80

Execution:
- Cylindrical
- Tapered

Lengths:
- 65 mm to 80 mm
- 100 mm

- GERC32-B / BD
- GERC32-HP / HPD / HPDD
- GERC32-W / WD
- GERC40-B / BD
- GERC40-HP / HPD / HPDD
- GERC40-W / WD

- UPC 32
- UPC 40