UTILIS
multidec®
swiss type tools

GENERAL CATALOG 2020/21

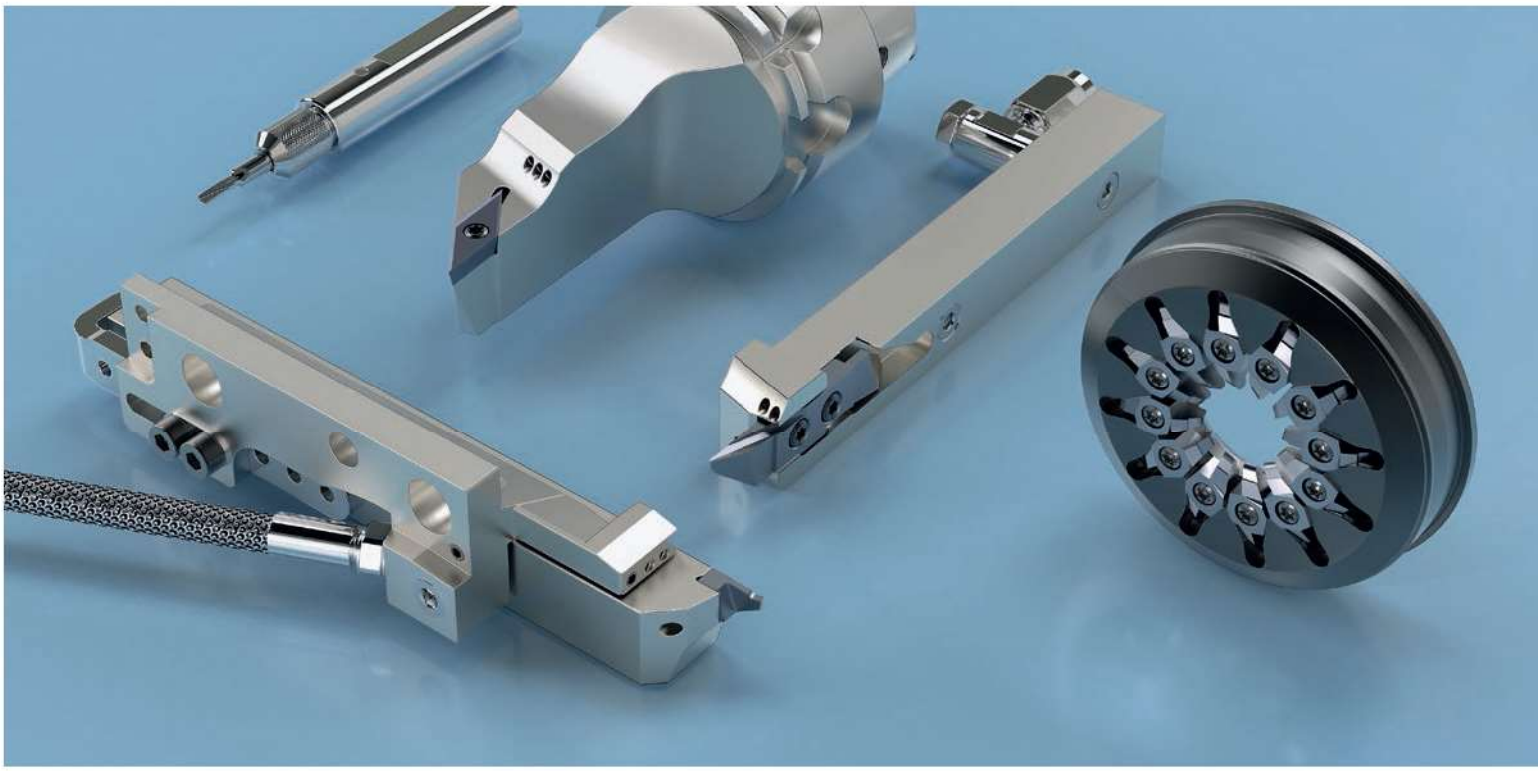

PRECISION TOOLS
FOR SMALL PART MANUFACTURING AND MICRO-CUTTING

future since 1915

UTILIS®
Tooling for High Technology

multidec®-KM™ is a precise and robust quick-change system for automatic lathes with an interface to ISO standard 26622.
UTILIS has suitable holders for multidec®-CUT, -TOP and for multidec®-BORE MICRO inserts for the KM Micro™ system.

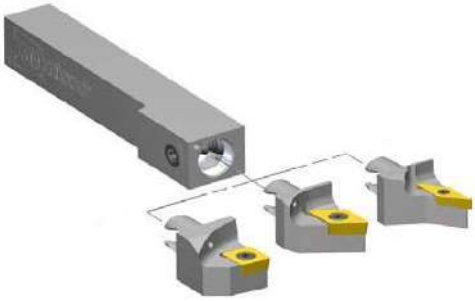

KM™ is a Trademark of Kennametall Inc.

Advantages:
– Fast and simple installation of KM™ basic tool holders into the existing tool positions
– Quick tool changes
– Annealed holders
– High-quality multidec® cutting edges

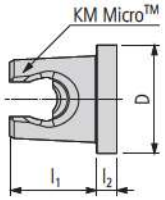

Size	System			Dimensions		
		Kennametal Widia	Ceratizit	D	l_1	l_2
12	KM Micro™	KM12		12	13	–
16		KM16		16	14.3	–

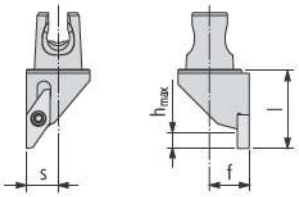

KM 12/16/20 CUT 1600 .

Order designation				Dimensions										Inserts
L		R		KM		f	l				s	h_{max}		49…
KM 12 CUT 1600 L	■	KM 12 CUT 1600 R	■	12		8	20				6	5		16…
KM 16 CUT 1600 L	■	KM 16 CUT 1600 R	■	16		10	20				8	5		16…

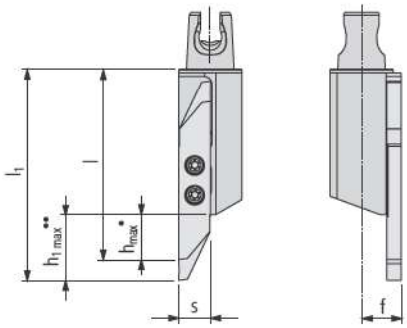

KM 12/16 CUT 3000 …

Order designation				Dimensions										Inserts
L		R		KM		f		l	l_1		s	h_{max}	$h_{1\,max}$	111…
KM 12 CUT 3000 L	■	KM 12 CUT 3000 R	■	12		8		43	–		6	10	–	30…
KM 16 CUT 3000 L	■	KM 16 CUT 3000 R	■	16		10		48	54		8	10	16	30…

• Short insert; •• Long insert

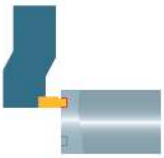

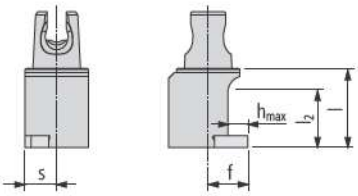

KM 12/16 CUT 1600-90 …

Order designation				Dimensions											Inserts
L		R		KM		f	l	l_2			s	h_{max}			49…
KM 12 CUT 1600-90 L	■	KM 12 CUT 1600-90 R	■	12		8	20	14			6	5			16…
KM 16 CUT 1600-90 L	■	KM 16 CUT 1600-90 R	■	16		10	20	14			8	5			16…

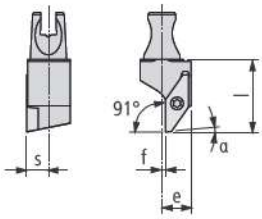

KM 12/16/20 SVXP… (91°)

Order designation				Dimensions										Inserts*
L		R		KM		f	l	e			s		α		305…
KM 12 SVXPL 10	■	KM 12 SVXPR 10	■	12		1	20	8			6		3°		VP..1003..
KM 16 SVXPL 10	■	KM 16 SVXPR 10	■	16		3	20	10			8		3°		VP..1003..
KM 20 SVXPL 10	■	KM 20 SVXPR 10	■	20		5.5	25	10.5			9.5		3°		VP..1003..

*** Attention**
Right hand holder needs left hand insert!

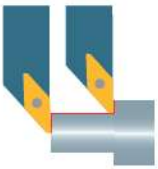

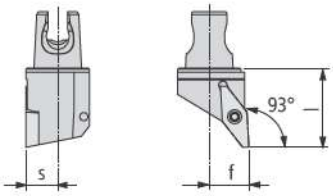

KM 12/16 SVJP… (93°)

Order designation				Dimensions											Inserts
L		R		KM		f	l				s				305…
KM 12 SVJPL 10	■	KM 12 SVJPR 10	■	12		8	20				6				VP..1003..
KM 16 SVJPL 10	■	KM 16 SVJPR 10	■	16		10	20				8				VP..1003..

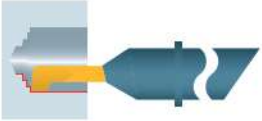

KM 12 SDA…

KM 16 SDA…

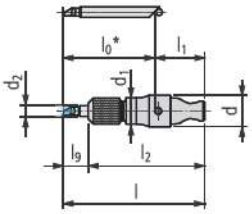

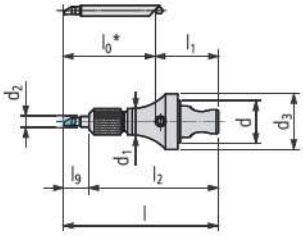

Order designation	N			Dimensions											Inserts
				KM	d	l	l_9	l_1	l_2	d_1	d_2	d_3			335…
KM 12 SDA-4	■			12	12	l_0+l_1	$l-l_2$	6	31.5	10	4	–			SD.4… / SX.4…
KM 12 SDA-6	■			12	12	l_0+l_1	$l-l_2$	6	35.5	15	6	15			SD.6… / SX.6…
KM 12 SDA-8	■			12	12	l_0+l_1	$l-l_2$	6	37.5	18	8	18			SD.8… / SX.8…
KM 16 SDA-4 IC	■			16	16	l_0+l_1	$l-l_2$	9	34.5	10	4	21			SD.4… / SX.4…
KM 16 SDA-6 IC	■			16	16	l_0+l_1	$l-l_2$	9	38.5	15	6	21			SD.6… / SX.6…
KM 16 SDA-8 IC	■			16	16	l_0+l_1	$l-l_2$	9	40.5	18	8	21			SD.8… / SX.8…

* The length of the insert is variable

Illustration	Description	Dimensions	Order designation		Holder	Inserts
	TORX screw	M2.5 × 8 T08	MSP 25060 T08	■	KM.. CUT 1600, KM.. SV.P.10	
		M3 × 9 T08	MSP 30090 T08	■	KM.. CUT 3000.	
	Nut	M8 × 0.5	MSP SDA 4M	■	KM..SDA-4.	
		M12 × 0.6	MSP SDA 6M	■	KM..SDA-6.	
		M14 × 0.75	MSP SDA 8M	■	KM..SDA-8.	
	Aligning device		SDA 4X	■	KM..SDA-4.	
			SDA 6X	■	KM..SDA-6.	
			SDA 8X	■	KM..SDA-8.	
	Retaining ring		MSP SDA 4S	■		SD. 4… SX. 4…
			MSP SDA 6S	■		SD. 6… SX. 6…
			MSP SDA 8S	■		SD. 8… SX. 8…

TORX screwdriver ..... 651…