MASTER CATALOG

HAIMER®

HAIMER

TOOLING TECHNOLOGY METRIC / INCH

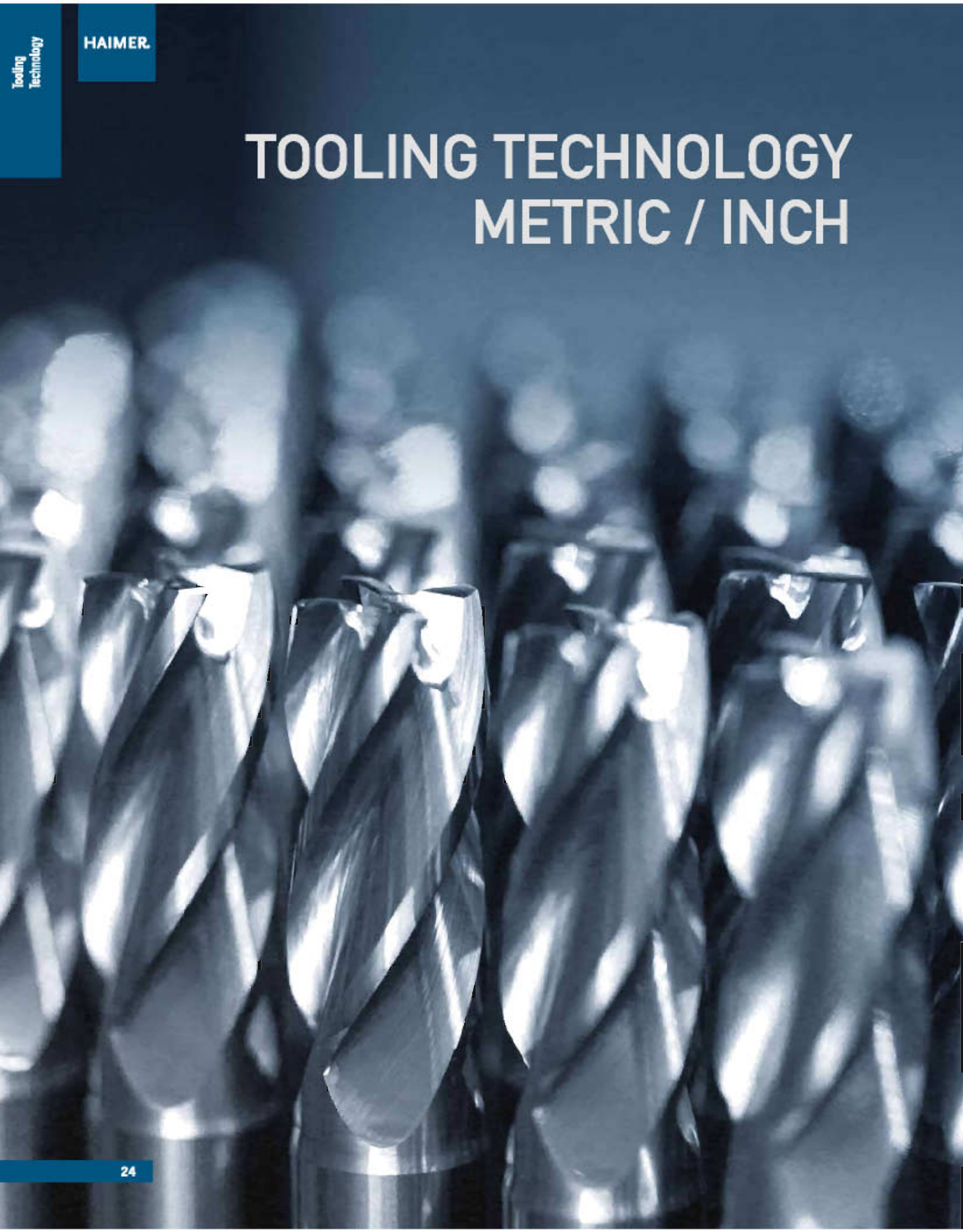

HAIMER

DUO-λOCK®

Advanced Materials Require Advanced Manufacturing.

The continuing development of high-strength, lightweight materials such as titanium alloys, Inconel, and new aluminum alloys are eagerly sought by manufacturers in many industries, including aerospace and defense, energy, and transportation. These new materials present significant machining challenges in themselves.

Add the competitive pressures in these global industries, and finding advanced manufacturing solutions becomes a top priority.

DUO-λOCK®

The Duo-Lock technology addresses the issue of the increasing cost of carbide by delivering a modular interface for cutting tool heads. Duo-Lock provides maximum stability and load capacity through a proprietary thread design with a double cone bond.

The results are unmatched precision and productivity, with a connection that is virtually unbreakable in the most demanding applications.

SAFE-λOCK®

The Safe-Lock anti-pullout interface is also available with modular Duo-Lock extensions to take advantage of long reach and aggressive cuts.

For the first time, a modular milling system can achieve the similar high performance of the latest generation solid carbide end mill.

To deliver groundbreaking joint technology, Duo-Lock combines the innovative histories of two leaders in the world of manufacturing – Kennametal and HAIMER.

Duo-Lock maximizes a carbide tool's full potential with productivity gains in both roughing and finishing. It provides high load capacity and rigidity when machining at high metal removal rates. When combined with high-performance cutting tools, Duo-Lock provides more than double the metal removal rate in common milling applications.

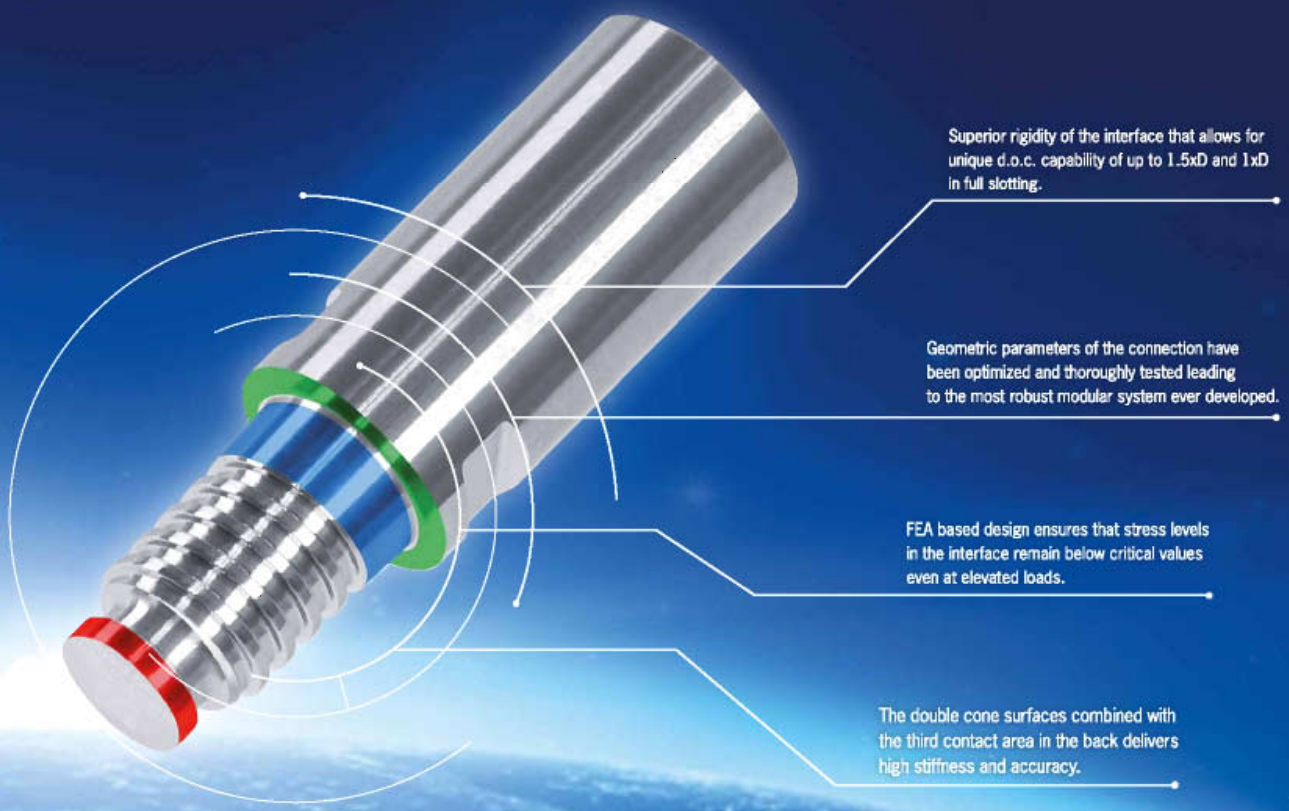

HAIMER

OVERVIEW DUO-LOCK®

Products		ø D1	Page	Characteristics
E1002KK – HAIMER MILL MULTIFUNCTION END MILL	METRIC	ø 10 – ø 20	121	W, Z=2, 20°
E1014UK – HAIMER MILL QUADRANT END MILL	METRIC	ø 10 – ø 20	123	R, Z=4
E1016/18UK – HAIMER MILL CHAMFERING END MILL	METRIC INCH	ø 10 – ø 20 ø 3/8" – ø 3/4"	125 127	W, Z=6, Z=8
F1004MN – HAIMER MILL Power Series UNCOATED	METRIC INCH	ø 10 – ø 20 ø 3/8" – ø 1 1/4"	129 131	1.5xØ, 45°, Z=4, 36,5° 38,5°
F1004MN – HAIMER MILL Power Series	METRIC INCH	ø 10 – ø 20 ø 3/8" – ø 1 1/4"	133 135	1.5xØ, 45°, Z=4, 36,5° 38,5°
F1004MN – HAIMER MILL Power Series UNCOAT	METRIC	ø 10 – ø 20	137	1.5xØ, R, Z=4, 36,5° 38,5°
F1004MN – HAIMER MILL Power Series	METRIC	ø 10 – ø 20	141	1.5xØ, R, Z=4, 36,5° 38,5°
F1105LL – HAIMER MILL Power Series CHIP BREAKER	METRIC	ø 10 – ø 32	145	3.0xØ, 45°, Z=5, 46° 47°
F1105MN – HAIMER MILL Power Series CHIP BREAKER	METRIC	ø 10 – ø 32	147	1.5xØ, 45°, Z=5, 46° 47°

Application	Material	
	Main Material	also suitable for
	P	K S N M H
	P	K S N M H
	P	K S N M H
	N	K S M P
	P	K S N M H
	N	K S M P
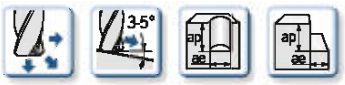	P	K S N M H
	P	K S N M H
	P	K S N M H

HAIMER

OVERVIEW DUO-LOCK®

Products		ø D1	Page	Characteristics
F2003MN – HAIMER MILL	METRIC	ø 2 – ø 20	149	1.5xØ, S, Z=3, 35° 36° 37°
	INCH	ø 3/8" – ø 3/4"	151	
F2003UK – HAIMER MILL	METRIC	ø 10 – ø 20	153	0,75xØ, S, Z=3, 35° 36° 37°
	INCH	ø 3/8" – ø 3/4"	155	
F2004MN – HAIMER MILL	METRIC	ø 2 – ø 32	157	1.5xØ, 45°, Z=4, 31° 33°
	INCH	ø 3/8" – ø 1 1/4"	159	
F2004MN – HAIMER MILL	METRIC	ø 10 – ø 20	161	1.5xØ, R, Z=4, 31° 33°
	INCH	ø 3/8" – ø 3/4"	165	
F2004UK – HAIMER MILL	METRIC	ø 10 – ø 32	167	0,75xØ, 45°, Z=4, 31° 33°
	INCH	ø 3/8" – ø 1 1/4"	169	
F2006/08/00MN – HAIMER MILL FINISHING	METRIC	ø 10 – ø 20	171	1.5xØ, 45°, Z=6/8/10, 35°
	INCH	ø 3/8" – ø 3/4"	173	
F2006/08/00MN – HAIMER MILL FINISHING	METRIC	ø 10 – ø 20	175	1.5xØ, R, Z=6/8/10, 35°
	INCH	ø 3/8" – ø 3/4"	177	
F2006/08/00UK – HAIMER MILL FINISHING	METRIC	ø 10 – ø 20	179	0,75xØ, 45°, Z=6/8/10, 35°
	INCH	ø 3/8" – ø 3/4"	181	
F2304MN – HAIMER MILL ROUGHING	METRIC	ø 10 – ø 20	183	1.5xØ, 45°, Z=4, 32° 34°
	INCH	ø 3/8" – ø 3/4"	185	

Application	Material	
	Main Material: P	also suitable for: K S N M H
	Main Material: P	also suitable for: K S N M H
	Main Material: P M	also suitable for: K S N H
	Main Material: P M	also suitable for: K S N H
	Main Material: P M	also suitable for: K S N H
	Main Material: P M	also suitable for: K S N H
	Main Material: P M	also suitable for: K S N H
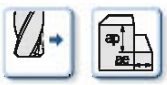	Main Material: P M	also suitable for: K S N H
	Main Material: P	also suitable for: K S N M

HAIMER

OVERVIEW DUO-LOCK®

Products		ø D1	Page	Characteristics
F2304UK – HAIMER MILL ROUGHING	METRIC INCH	ø 10 – ø 20 ø 3/8" – ø 3/4"	187 189	0,75xØ, 45°, Z=4, 32° 34°
F4002MN – HAIMER MILL Alu Series UNCOATED	METRIC	ø 10 – ø 20	191	1.5xØ, 45°, Z=2, 41° 43°
F4002MN – HAIMER MILL Alu Series	METRIC	ø 10 – ø 20	193	1.5xØ, 45°, Z=2, 41° 43°
F4003MN – HAIMER MILL Alu Series UNCOATED	METRIC	ø 10 – ø 20	195	1.5xØ, 45°, Z=3, 42° 41° 43°
F4003MN – HAIMER MILL Alu Series	METRIC	ø 10 – ø 20	197	1.5xØ, 45°, Z=3, 42° 41° 43°
H2004UK – HAIMER MILL HF Series HIGH FEED KZ	METRIC	ø 10 – ø 20	199	0,75xØ, R, Z=4, 30°
H2006UK – HAIMER MILL HF Series HIGH FEED KZ	METRIC	ø 10 – ø 20	201	0,75xØ, R, Z=6, 30°

Application	Material	
	Main Material: P	also suitable for: K S N M
	Main Material: N	
	Main Material: N	
	Main Material: N	
	Main Material: N	
	Main Material: P	also suitable for: K S N M H
	Main Material: P	also suitable for: K S N M H

HAIMER

OVERVIEW DUO-LOCK®

Products		ø D1	Page	Characteristics
V2002MN – HAIMER MILL	METRIC	ø 2 – ø 10	203	1.5xØ, VR, Z=2, 10°
V2002UK – HAIMER MILL	METRIC INCH	ø 10 – ø 20 ø 3/8" – ø 3/4"	205 207	0,75xØ, VR, Z=2, 10°
V2004MN – HAIMER MILL	METRIC	ø 2 – ø 10	209	1.5xØ, VR, Z=4, 32° 34°
V2004UK – HAIMER MILL	METRIC	ø 10 – ø 20	211	0,75xØ, VR, Z=4, 32° 34°
V4002UK – HAIMER MILL Alu Series UNCOATED	METRIC	ø 10 – ø 20	213	0,75xØ, VR, Z=2, 10°
V4002UK – HAIMER MILL Alu Series	METRIC	ø 10 – ø 20	215	0,75xØ, VR, Z=2, 10°

Application	Material	
	Main Material: P	also suitable for: K S N M H
	Main Material: P	also suitable for: K S N M H
	Main Material: P	also suitable for: K S N M H
	Main Material: P	also suitable for: K S N M H
	Main Material: N	
	Main Material: N	

HAIMER

EXPLANATION ICONS/ARTICLE CODE/MATERIAL LIST DUO-LOCK®

Explanation Icons

Characteristics

Cutting length

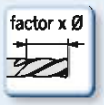

Sharp cutting edge

Corner chamfer

Corner radius

Ball Nose

Spot

Edge radius

Teeth 2

Teeth 3

Teeth 4

Teeth 5

Teeth 6

Teeth 8

Teeth 10

Helix angle

Application

Feed direction

Feed direction

Feed direction

Ramping

Slotting

Side milling

Rounding

Chamfering

Drilling

3D Milling

V-slotting

Contouring

Chamfering

Side milling

Coolant

Emulsion

Cold air

Dry machining

Minimal lubrication

Explanation article code

DL12	F	1	0	0	2	M	N
Interface	Tool type	Group	Type	Modification	No. of teeth	Length of cut	Overall length
DL10 DL12 DL16 DL20 DL25 DL32	F- Cylindrical end mill E- Chamfering end mill V- Ball nose end mill H- HighFeed end mill	1- Universal 2- Steel < 52HRC 4- Alu 6- Titan/ Inconel	0- Plain cutter 1- Chip breaker 3- Roughing	0- With neck 1- No Neck	2- Z2 3- Z3 4- Z4 5- Z5 6- Z6 8- Z8 0- Z10	L- 2.6-3.5xD M- 1.5xD K- 1.25xD U- 0.75xD	N- 2xD L- 3.5xD K- 1.25xD

Material list

HAIMER Material groups		Example material		Material information	
		ANSI	Material no.	Tensile strength	Content/Hardness
P1	**General construction steels**	A252, A50-2, 1045	1.0038, 1.0050, 1.0503	≤ 116,000 PSI, 800MPA	up to 25 HRC
P2	**Heat treated steels**	D2, 4140	1.2367, 1.2379, 1.2363, 1.7225	> 116,000 PSI, 800MPA	up to 45 HRC
M1	Stainless steels	303, 304	1.4305, 1.4301, 1.4034	≤ 94,275 PSI, 650MPA	
M2	Stainless steels	316Ti, 316L	1.4571, 1.4404, 1.4418	> 94,275 PSI, 650MPA	
K1	Cast iron	ASTM A48 NO. 30, ASTM A48 NO. 55/60, G1800	0.6020, 0.6040, 0.7040	≤ 65,265 PSI, 450MPA	
K2	Cast iron	ASTM A536 80-55-06, ASTMA536 100-70-06	0.7060, 0.7070	> 65,265 PSI, 450MPA	
S1	Titanium & titanium alloys	Ti6Al4V	3.7165		
S2	High Temp alloys	Inconel, Nimonic			
N1	Wrought aluminum alloys	A5005, A6061, A7075	3.3315		
N2	Aluminum cast alloys	A310, A400	3.2581		Si >12%
H1	Hardened steels				45 - 55 HRC
H1	Hardened steels				> 55 HRC

	1000	R	1.00	A	A	0001	KR
	Diameter	Cutting edge transition	Size transition	Material	Coating	Special number	Cooling
	1200- Metric 1/2Z- Inch	S- Sharp cutting edge C- Chamfer R- Radius W- Chamfer angle	1.00- Metric .03- Inch 90- Chamfer angle 60- Chamfer angle 120- Chamfer angle	A- HF10 h5 D- HF10 h6	A- HAIMER-UNI C- HAIMER-ALU P- HAIMER-P - none	0000 - 9999	KR- Cooling radial KZ- Cooling central KS- Cooling special

Cutting data

HAIMER Material groups		Example material ANSI	Material no.	Material information Tensile strength	Content/ Hardness	Roughing Vc (m/min)	Finishing Vc (m/min)
P1	**General construction steels**	A252, A50-2, 1045	1.0038, 1.0050, 1.0503	≤ 800 N/mm²	up to 25 HRC	**160 – 220**	**220 – 280**
P2	**Heat treated steels**	D2, 4140	1.2367, 1.2379, 1.2363, 1.7225	> 800 N/mm²	up to 45 HRC	**120 – 160**	**160 – 200**
M1	Stainless steels	303, 304	1.4305, 1.4301, 1.4034	≤ 650 N/mm²		80 – 120	120 – 160
M2	Stainless steels	316Ti, 316L	1.4571, 1.4404, 1.4418	> 650 N/mm²		60 – 90	90 – 120
K1	Cast iron	ASTM A48 NO. 30, ASTM A48 NO. 55/60, G1800	0.6020, 0.6040, 0.7040	≤ 450 N/mm²		120 – 180	180 – 240
K2	Cast iron	ASTM A536 80-55-06, ASTMA536 100-70-06	0.7060, 0.7070	> 450 N/mm²		80 – 160	160 – 220
S1	Titanium & titanium alloys	Ti6Al4V	3.7165			40 – 80	40 – 80
S2	High Temp alloys	Inconel, Nimonic		800 – 1700 N/mm²		30 – 40	30 – 40
N1	Wrought aluminum alloys	A5005, A6061, A7075	3.3315		Si < 9%	500 – 900	500 – 900
N2	Aluminum cast alloys	A310, A400	3.2581		Si > 9%	120 – 350	120 – 350
H1	Hardened steels				45 – 55 HRC	40 – 60	60 – 80

Cutting data are reference values and need to be adjusted according to the application area.

Feed per tooth fz (mm/tooth) in relation with D1 and cutting width ae				
	ø 10	**ø 12**	**ø 16**	**ø 20**
fz	0.03 – 0.09	0.03 – 0.10	0.04 – 0.12	0.05 – 0.13

Cutting data is based on short cylindrical extensions, cutting data for long overhang need to be adjusted.

METRIC

E1002KK – DUO-LOCK® HAIMER MILL MULTIFUNCTION END MILL

Technical data and Product characteristics

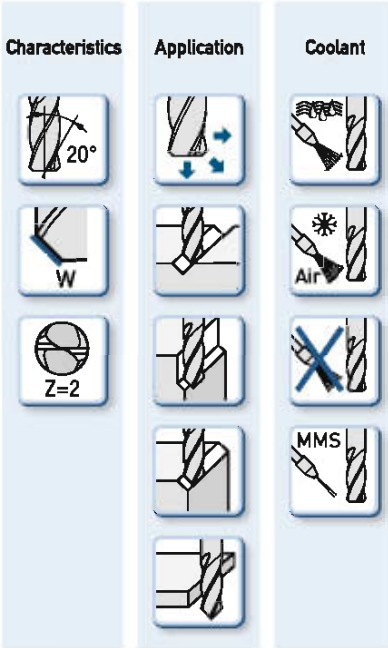

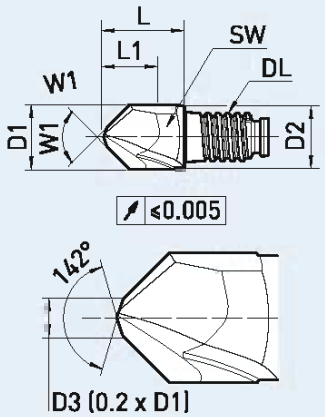

Fine balanced

Material – characteristics

Main Material: **P**

also suitable for: **K** **S** **N** **M** **H**

- Cone angle 60°/90°/120°/142°
- Center spot
- Multi functional tool
- Circumferenca cutter
- Best length repeatability

Article-Code	HAIMER Quality	Duo-Lock Size	Z	D1 (f9) [mm]	Chamfer	W1	L1 max. [mm]	L [mm]	D2 [mm]	AF [mm]	Torque [N/m]
DL10E1002KK1000W60..	DA	DL10	2	10.00	W	60°	10	12.5	9.6	SW8	20
DL10E1002KK1000W90..	DA	DL10	2	10.00	W	90°	10	12.5	9.6	SW8	20
DL10E1002KK1000W120..	DA	DL10	2	10.00	W	120°	10	12.5	9.6	SW8	20
DL10E1002KK1000W142..	DA	DL10	2	10.00	W	142°	10	12.5	9.6	SW8	20
DL12E1002KK1200W60..	DA	DL12	2	12.00	W	60°	12	15	11.5	SW9.5	30
DL12E1002KK1200W90..	DA	DL12	2	12.00	W	90°	12	15	11.5	SW9.5	30
DL12E1002KK1200W120..	DA	DL12	2	12.00	W	120°	12	15	11.5	SW9.5	30
DL12E1002KK1200W142..	DA	DL12	2	12.00	W	142°	12	15	11.5	SW9.5	30
DL16E1002KK1600W60..	DA	DL16	2	16.00	W	60°	16	20	15.5	SW13	60
DL16E1002KK1600W90..	DA	DL16	2	16.00	W	90°	16	20	15.5	SW13	60
DL16E1002KK1600W120..	DA	DL16	2	16.00	W	120°	16	20	15.5	SW13	60
DL16E1002KK1600W142..	DA	DL16	2	16.00	W	142°	16	20	15.5	SW13	60
DL20E1002KK2000W60..	DA	DL20	2	20.00	W	60°	20	25	19.3	SW16	80
DL20E1002KK2000W90..	DA	DL20	2	20.00	W	90°	20	25	19.3	SW16	80
DL20E1002KK2000W120..	DA	DL20	2	20.00	W	120°	20	25	19.3	SW16	80
DL20E1002KK2000W142..	DA	DL20	2	20.00	W	142°	20	25	19.3	SW16	80

Order No. = Article Code + HAIMER Quality.

Cutting data

HAIMER Material groups		Example material		Material information			
		ANSI	Material no.	Tensile strength	Content/ Hardness	Roughing Vc (m/min)	Finishing Vc (m/min)
P1	**General construction steels**	A252, A50-2, 1045	1.0038, 1.0050, 1.0503	≤ 800 N/mm²	up to 25 HRC	**160 – 220**	**220 – 280**
P2	**Heat treated steels**	D2, 4140	1.2367, 1.2379, 1.2363, 1.7225	> 800 N/mm²	up to 45 HRC	**120 – 160**	**160 – 200**
M1	Stainless steels	303, 304	1.4305, 1.4301, 1.4034	≤ 650 N/mm²		80 – 120	120 – 160
M2	Stainless steels	316Ti, 316L	1.4571, 1.4404, 1.4418	> 650 N/mm²		60 – 90	90 – 120
K1	Cast iron	ASTM A48 NO. 30, ASTM A48 NO. 55/60, G1800	0.6020, 0.6040, 0.7040	≤ 450 N/mm²		120 – 180	180 – 240
K2	Cast iron	ASTM A536 80-55-06, ASTMA536 100-70-06	0.7060, 0.7070	> 450 N/mm²		80 – 160	160 – 220
S1	Titanium & titanium alloys	Ti6Al4V	3.7165			40 – 80	40 – 80
S2	High Temp alloys	Inconel, Nimonic		800 – 1700 N/mm²		30 – 40	30 – 40
N1	Wrought aluminum alloys	A5005, A6061, A7075	3.3315		Si < 9%	500 – 900	500 – 900
N2	Aluminum cast alloys	A310, A400	3.2581		Si > 9%	120 – 350	120 – 350
H1	Hardened steels				45 – 55 HRC	40 – 60	60 – 80

Cutting data are reference values and need to be adjusted according to the application area.

Feed per tooth fz (mm/tooth) in relation with D1 and cutting width ae				
	ø 10	**ø 12**	**ø 16**	**ø 20**
fz	0.03 – 0.09	0.03 – 0.10	0.04 – 0.12	0.05 – 0.13

Cutting data is based on short cylindrical extensions, cutting data for long overhang need to be adjusted.

METRIC

E1014UK – DUO-LOCK® HAIMER MILL QUADRANT END MILL

Technical data and Product characteristics

Characteristics	Application	Coolant
R		
Z=4		
		Air
		MMS

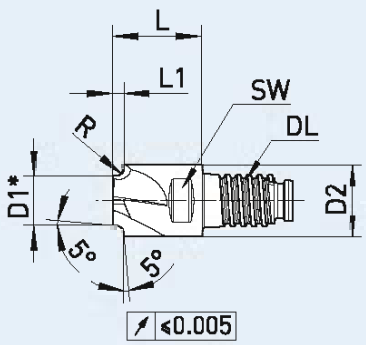

Fine balanced
* diameter not center cutting

Material – characteristics

Main Material

P

also suitable for

K S N M H

- For contour rounding
- 5° tangential release
- Positive rake angle without profile displacement
- Best length repeatability

Article-Code	HAIMER Quality	Duo-Lock Size	D1 (h9) [mm]	Cutting edge	Radius [mm]	L1 max. [mm]	L [mm]	D2 [mm]	AF [mm]	Torque [N/m]
DL10E1014UK1000R1.00..	DA	DL10	7	R	1.00	1.50	12.5	10	SW8	20
DL10E1014UK1000R1.50..	DA	DL10	6	R	1.50	2.00	12.5	10	SW8	20
DL10E1014UK1000R2.00..	DA	DL10	5	R	2.00	2.50	12.5	10	SW8	20
DL12E1014UK1200R2.50..	DA	DL12	6	R	2.50	3.00	15.0	12	SW9.5	30
DL12E1014UK1200R3.00..	DA	DL12	5	R	3.00	3.50	15.0	12	SW9.5	30
DL16E1014UK1600R3.50..	DA	DL16	8	R	3.50	4.00	20.0	16	SW13	60
DL16E1014UK1600R4.00..	DA	DL16	7	R	4.00	4.50	20.0	16	SW13	60
DL16E1014UK1600R4.50..	DA	DL16	6	R	4.50	5.00	20.0	16	SW13	60
DL20E1014UK2000R5.00..	DA	DL20	8	R	5.00	6.00	25.0	20	SW16	80
DL20E1014UK2000R6.00..	DA	DL20	6	R	6.00	7.00	25.0	20	SW16	80

Order No. = Article Code + HAIMER Quality.

E1016UK/E1018UK – DUO-LOCK® HAIMER MILL CHAMFERING END MILL

METRIC

Cutting data

HAIMER Material groups		Example material ANSI	Material no.	Material information Tensile strength	Content/ Hardness	Roughing Vc (m/min)	Finishing Vc (m/min)
P1	**General construction steels**	A252, A50-2, 1045	1.0038, 1.0050, 1.0503	≤ 800 N/mm²	up to 25 HRC	**160 – 220**	**220 – 280**
P2	**Heat treated steels**	D2, 4140	1.2367, 1.2379, 1.2363, 1.7225	> 800 N/mm²	up to 45 HRC	**120 – 160**	**160 – 200**
M1	Stainless steels	303, 304	1.4305, 1.4301, 1.4034	≤ 650 N/mm²		80 – 120	120 – 160
M2	Stainless steels	316Ti, 316L	1.4571, 1.4404, 1.4418	> 650 N/mm²		60 – 90	90 – 120
K1	Cast iron	ASTM A48 NO. 30, ASTM A48 NO. 55/60, G1800	0.6020, 0.6040, 0.7040	≤ 450 N/mm²		120 – 180	180 – 240
K2	Cast iron	ASTM A536 80-55-06, ASTMA536 100-70-06	0.7060, 0.7070	> 450 N/mm²		80 – 160	160 – 220
S1	Titanium & titanium alloys	Ti6Al4V	3.7165			40 – 80	40 – 80
S2	High Temp alloys	Inconel, Nimonic		800 – 1700 N/mm²		30 – 40	30 – 40
N1	Wrought aluminum alloys	A5005, A6061, A7075	3.3315		Si < 9%	500 – 900	500 – 900
N2	Aluminum cast alloys	A310, A400	3.2581		Si > 9%	120 – 350	120 – 350
H1	Hardened steels				45 – 55 HRC	40 – 60	60 – 80

Cutting data are reference values and need to be adjusted according to the application area.

Feed per tooth fz (mm/tooth) in relation with D1 and cutting width ae				
	ø 10	**ø 12**	**ø 16**	**ø 20**
fz	0.03 – 0.09	0.03 – 0.10	0.04 – 0.12	0.05 – 0.13

Cutting data is based on short cylindrical extensions, cutting data for long overhang need to be adjusted.

METRIC

E1016UK/E1018UK – DUO-LOCK® HAIMER MILL CHAMFERING END MILL

Technical data and Product characteristics

Characteristics

Application

Coolant

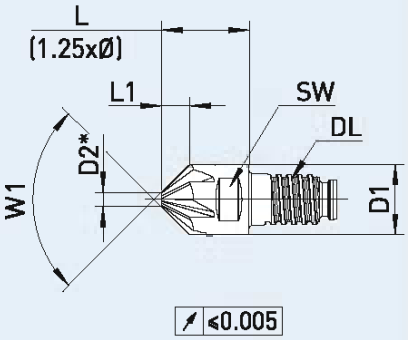

Fine balanced
* diameter not center cutting

Material – characteristics

Main Material

P

also suitable for

K S N M H

- Cone angle 60°/90°/120°
- Flat tip
- Multi functional tool
- Best length repeatability
- Straight fluted

Article-Code	HAIMER Quality	Duo-Lock Size	Z	D1 (h6) [mm]	Chamfer	W1	L1 max. [mm]	L [mm]	D2 [mm]	AF [mm]	Torque [N/m]
DL10E1016UK1000W60..	DA	DL10	6	10.00	W	60°	6.9	12.5	2.0	SW8	20
DL10E1016UK1000W90..	DA	DL10	6	10.00	W	90°	4	12.5	2.0	SW8	20
DL10E1016UK1000W120..	DA	DL10	6	10.00	W	120°	2.3	12.5	2.0	SW8	20
DL12E1016UK1200W60..	DA	DL12	6	12.00	W	60°	8.3	15	2.4	SW9.5	30
DL12E1016UK1200W90..	DA	DL12	6	12.00	W	90°	4.8	15	2.4	SW9.5	30
DL12E1016UK1200W120..	DA	DL12	6	12.00	W	120°	2.7	15	2.4	SW9.5	30
DL16E1018UK1600W60..	DA	DL16	8	16.00	W	60°	11	20	3.2	SW13	60
DL16E1018UK1600W90..	DA	DL16	8	16.00	W	90°	6.4	20	3.2	SW13	60
DL16E1018UK1600W120..	DA	DL16	8	16.00	W	120°	3.6	20	3.2	SW13	60
DL20E1018UK2000W60..	DA	DL20	8	20.00	W	60°	13.9	25	4	SW16	80
DL20E1018UK2000W90..	DA	DL20	8	20.00	W	90°	8	25	4	SW16	80
DL20E1018UK2000W120..	DA	DL20	8	20.00	W	120°	4.6	25	4	SW16	80

Order No. = Article Code + HAIMER Quality.

E1016UK/E1018UK – DUO-LOCK® HAIMER MILL CHAMFERING END MILL

INCH

Cutting data

HAIMER Material groups		Example material ANSI	Material no.	Material information Tensile strength	Content/ Hardness	Cutting width Roughing Cutting Speed (SFM)	Finishing
P1	**General construction steels**	A252, A50-2, 1045	1.0038, 1.0050, 1.0503	≤ 116,000 PSI, 800MPA	up to 25 HRC	**525 - 725**	**725 - 920**
P2	**Heat treated steels**	D2, 4140	1.2367, 1.2379, 1.2363, 1.7225	> 116,000 PSI, 800MPA	up to 45 HRC	**395 - 525**	**525 - 655**
M1	Stainless steels	303, 304	1.4305, 1.4301, 1.4034	≤ 94,275 PSI, 650MPA		260 - 395	395 - 525
M2	Stainless steels	316Ti, 316L	1.4571, 1.4404, 1.4418	> 94,275 PSI, 650MPA		195 - 295	295 - 395
K1	Cast iron	ASTM A48 NO. 30, ASTM A48 NO. 55/60, G1800	0.6020, 0.6040, 0.7040	≤ 65,265 PSI, 450MPA		395 - 590	590 - 785
K2	Cast iron	ASTM A536 80-55-06, ASTMA536 100-70-06	0.7060, 0.7070	> 65,265 PSI, 450MPA		260 - 525	525 - 720
S1	Titanium & titanium alloys	Ti6Al4V	3.7165			130 - 260	130 - 260
S2	High Temp alloys	Inconel, Nimonic				100 -130	100 -130
N1	Wrought aluminum alloys	A5005, A6061, A7075	3.3315			1640 -2950	1640 -2950
N2	Aluminum cast alloys	A310, A400	3.2581		Si >12%	395 -1150	395 -1150
H1	Hardened steels				45 - 55 HRC	130 - 195	195 -260

Cutting data are reference values and need to be adjusted according to the application area.

Feed per tooth (inch/tooth) in relation with D1 and cutting width ae				
Ø	3/8	1/2	5/8	3/4
fz	0.0011 - 0.0035	0.0011 - 0.0039	0.0016 - 0.0047	0.002 - 0.005

Cutting data is based on short cylindrical extensions, cutting data for long overhang need to be adjusted.

INCH

E1016UK/E1018UK – DUO-LOCK® HAIMER MILL CHAMFERING END MILL

Technical data and Product characteristics

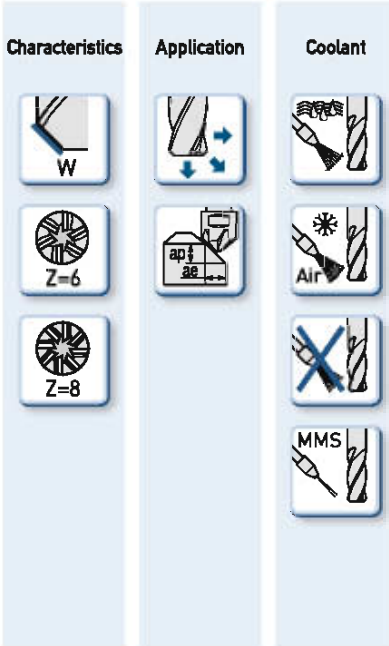

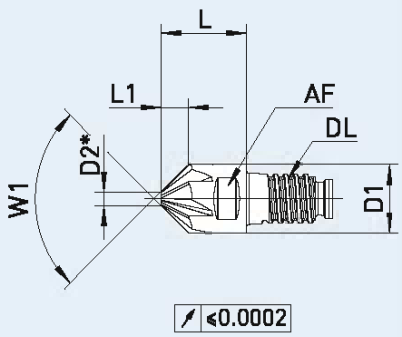

Fine balanced
* diameter not center cutting

Material – characteristics

Main Material

P

also suitable for

K S N M H

- Cone angle 60°/90°/120°
- Flat tip
- Multi functional tool
- Best length repeatability
- Straight fluted

Article-Code	HAIMER Quality	Duo-Lock Size	Z	D1 (h6) [inch]	Chamfer	W1	L1 max. [inch]	L [inch]	D2 [inch]	AF [inch]	Torque [N/m]
DL10E1016UK3/8ZW60..	DA	DL10	6	3/8	W	60	0.272	0.492	0.079	0.315	20
DL10E1016UK3/8ZW90..	DA	DL10	6	3/8	W	90	0.157	0.492	0.079	0.315	20
DL10E1016UK3/8ZW120..	DA	DL10	6	3/8	W	120	0.091	0.492	0.079	0.315	20
DL12E1016UK1/2ZW60..	DA	DL12	6	1/2	W	60	0.327	0.591	0.094	0.374	30
DL12E1016UK1/2ZW90..	DA	DL12	6	1/2	W	90	0.189	0.591	0.094	0.374	30
DL12E1016UK1/2ZW120..	DA	DL12	6	1/2	W	120	0.11	0.591	0.094	0.374	30
DL16E1018UK5/8ZW60..	DA	DL16	8	5/8	W	60	0.433	0.787	0.126	0.512	60
DL16E1018UK5/8ZW90..	DA	DL16	8	5/8	W	90	0.252	0.787	0.126	0.512	60
DL16E1018UK5/8ZW120..	DA	DL16	8	5/8	W	120	0.142	0.787	0.126	0.512	60
DL20E1018UK3/4ZW60..	DA	DL20	8	3/4	W	60	0.547	0.984	0.157	0.630	80
DL20E1018UK3/4ZW90..	DA	DL20	8	3/4	W	60	0.315	0.984	0.157	0.630	80
DL20E1018UK3/4ZW120..	DA	DL20	8	3/4	W	60	0.181	0.984	0.157	0.630	80

Order No. = Article Code + HAIMER Quality

F1004MN – DUO-LOCK® HAIMER MILL Power Series CHAMFER

METRIC

Cutting data

HAIMER Material groups		Example material ANSI	Material no.	Material information Tensile strength	Content/ Hardness	Cutting width ae = 100% D1 ap = 1 x D1 Cutting speed Vc (m/min)	ae = 50% D1 ap = 1,5 x D1	ae = 25% D1 ap = L1 max.
P1	General construction steels	A252, A50-2, 1045	1.0038, 1.0050, 1.0503	≤ 800 N/mm²	up to 25 HRC	20	30	40
P2	Heat treated steels	D2, 4140	1.2367, 1.2379, 1.2363, 1.7225	> 800 N/mm²	up to 45 HRC	20	30	40
M1	Stainless steels	303, 304	1.4305, 1.4301, 1.4034	≤ 650 N/mm²		10 – 20	10 – 20	10 – 20
M2	Stainless steels	316Ti, 316L	1.4571, 1.4404, 1.4418	> 650 N/mm²		10 – 20	10 – 20	10 – 20
K1	Cast iron	ASTM A48 NO. 30, ASTM A48 NO. 55/60, G1800	0.6020, 0.6040, 0.7040	≤ 450 N/mm²		20 – 30	20 – 30	20 – 30
K2	Cast iron	ASTM A536 80-55-06, ASTMA536 100-70-06	0.7060, 0.7070	> 450 N/mm²		20 – 30	20 – 30	20 – 30
S1	Titanium & titanium alloys	Ti6Al4V	3.7165			10	10	20
S2	High Temp alloys	Inconel, Nimonic		800 – 1700 N/mm²		10	10	20
N1	**Wrought aluminum alloys**	A5005, A6061, A7075	3.3315		Si < 9%	**300 – 400**	**300 – 400**	**400 – 500**
N2	**Aluminum cast alloys**	A310, A400	3.2581		Si > 9%	**300 – 400**	**300 – 400**	**400 – 500**

Cutting data are reference values and need to be adjusted according to the application area.

Feed per tooth fz (mm/tooth) in relation with D1 and cutting width ae	ø 10	ø 12	ø 16	ø 20
fz	0.03 – 0.09	0.03 – 0.10	0.04 – 0.12	0.05 – 0.13

Cutting data is based on short cylindrical extensions, cutting data for long overhang need to be adjusted.

METRIC

F1004MN – DUO-LOCK® HAIMER MILL Power Series CHAMFER UNCOATED

Technical data and Product characteristics

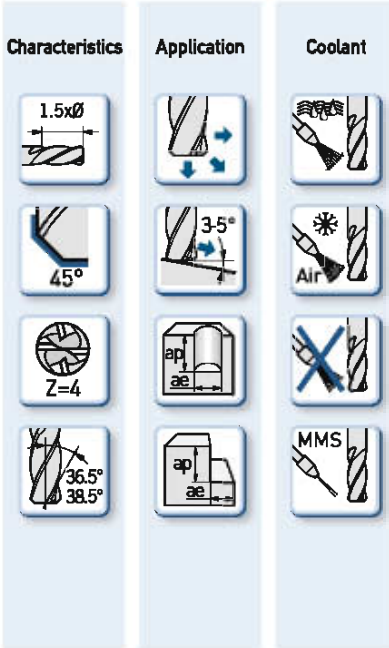

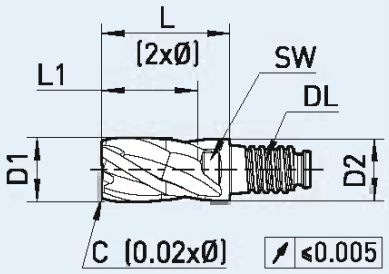

Fine balanced

Material – characteristics

Main Material

N

also suitable for

K S M P

- Particularly suitable for long overhang and cases of unstable part clamping
- Best results with carbide extension
- Neck for higher cutting depth
- Center cutting
- Unequal cutting edge
- Best length repeatability
- Polished flute and relief
- Uncoated

Article-Code	HAIMER Quality	Duo-Lock Size	D1 (f9) [mm]	Cutting edge	Size [mm]	L1 max. [mm]	L [mm]	D2 [mm]	AF [mm]	Torque [N/m]
DL10F1004MN1000C..	D-	DL10	10.00	C	0.20	15	20	9.6	SW8	20
DL12F1004MN1200C..	D-	DL12	12.00	C	0.24	18	24	11.5	SW9.5	30
DL16F1004MN1600C..	D-	DL16	16.00	C	0.32	24	32	15.5	SW13	60
DL20F1004MN2000C..	D-	DL20	20.00	C	0.40	30	40	19.3	SW16	80

Order No. = Article Code + HAIMER Quality.

F1004MN – DUO-LOCK® HAIMER MILL Power Series CHAMFER

INCH

Cutting data

HAIMER Material groups		Example material ANSI	Tensile strength	Material information Tensile strength	Content/ Hardness	Cutting width ae = 100% D1 ap = 1 x D1 Cutting Speed (SFM)	ae = 50% D1 ap = 1.5 x D1	ae = 25% D1 ap = L1 max.
P1	General construction steels	A252, A50-2, 1045	1.0038, 1.0050, 1.0503	≤ 116,000 PSI, 800MPA	up to 25 HRC	65	100	130
P2	Heat treated steels	D2, 4140	1.2367, 1.2379, 1.2363, 1.7225	> 116,000 PSI, 800MPA	up to 45 HRC	65	100	130
M1	Stainless steels	303, 304	1.4305, 1.4301, 1.4034	≤ 94,275 PSI, 650MPA		35 - 65	35 - 65	35 - 65
M2	Stainless steels	316Ti, 316L	1.4571, 1.4404, 1.4418	> 94,275 PSI, 650MPA		35 - 65	35 - 65	35 - 65
K1	Cast iron	ASTM A48 NO. 30, ASTM A48 NO. 55/60, G1800	0.6020, 0.6040, 0.7040	≤ 65,265 PSI, 450MPA		65 - 100	65 - 100	65 - 100
K2	Cast iron	ASTM A536 80-55-06, ASTMA536 100-70-06	0.7060, 0.7070	> 65,265 PSI, 450MPA		65 - 100	65 - 100	65 - 100
S1	Titanium & titanium alloys	Ti6Al4V	3.7165			35	35	65
S2	High Temp alloys	Inconel, Nimonic				35	35	65
N1	**Wrought aluminum alloys**	A5005, A6061, A7075	3.3315			**985 -1310**	**985 -1310**	**1310 – 1640**
N2	**Aluminum cast alloys**	A310, A400	3.2581		Si >12%	**985 -1310**	**985 -1310**	**1310 – 1640**

Cutting data are reference values and need to be adjusted according to the application area.

Feed per tooth (inch/tooth) in relation with D1 and cutting width ae						
Ø	3/8	1/2	5/8	3/4	1	1 1/4
fz	0.0011 - 0.0035	0.0011 - 0.0039	0.0016 - 0.0047	0.002 - 0.005	0.0024 - 0.0067	0.0027 - 0.0079

Cutting data is based on short cylindrical extensions, cutting data for long overhang need to be adjusted.

INCH

F1004MN – DUO-LOCK® HAIMER MILL Power Series CHAMFER UNCOATED

Technical data and Product characteristics

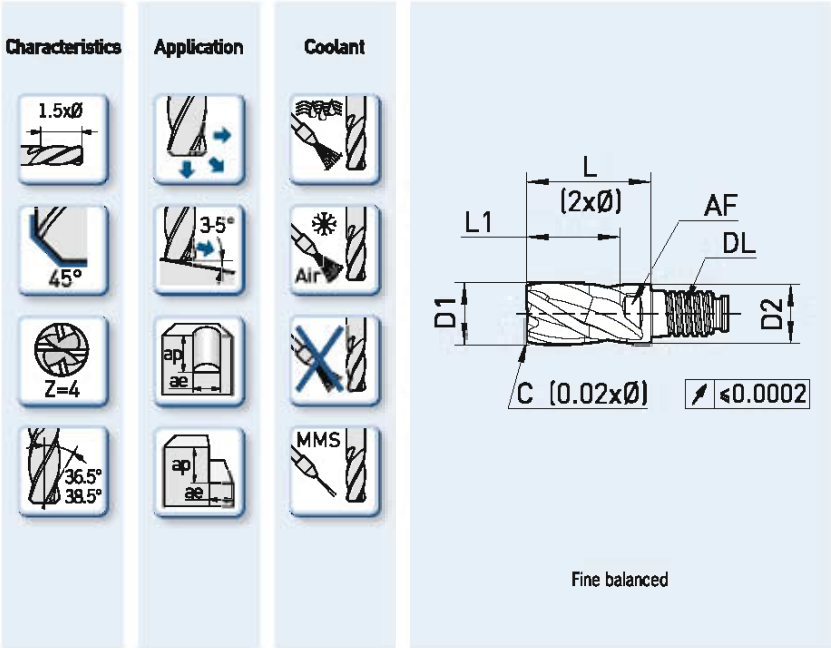

Material – characteristics

Main Material

N

also suitable for

K S M P

- Particularly suitable for long overhang and cases of unstable part clamping
- Best results with carbide extension
- Neck for higher cutting depth
- Center cutting
- Unequal cutting edge
- Best length repeatability
- Polished flute and relief
- Uncoated

Article-Code	HAIMER Quality	Duo-Lock Size	D1 (f9) [inch]	Cutting edge	Size [inch]	L1 max. [inch]	L [inch]	D2 [inch]	AF [inch]	Torque [N/m]
DL10F1004MN3/8ZC..	D-	DL10	3/8	C	0.008	0.591	0.787	0.359	0.315	20
DL12F1004MN1/2ZC..	D-	DL12	1/2	C	0.010	0.709	0.945	0.480	0.374	30
DL16F1004MN5/8ZC..	D-	DL16	5/8	C	0.013	0.945	1.260	0.605	0.512	60
DL20F1004MN3/4ZC..	D-	DL20	3/4	C	0.015	1.181	1.575	0.730	0.630	80
DL25F1004MN1ZC..	D-	DL25	1	C	0.020	1.476	1.970	0.961	0.827	100
DL32F1004MN11/4ZC..	D-	DL32	11/4	C	0.025	1.890	2.520	1.211	1.102	130

Order No. = Article Code + HAIMER Quality

F1004MN – DUO-LOCK® HAIMER MILL Power Series CHAMFER

METRIC

Cutting data

HAIMER Material groups		Example material ANSI	Material no.	Material information Tensile strength	Content/ Hardness	Cutting width ae = 100% D1 ap = 1 x D1 Cutting speed Vc (m/min)	ae = 50% D1 ap = 1,5 x D1	ae = 25% D1 ap = L1 max.
P1	**General construction steels**	A252, A50-2, 1045	1.0038, 1.0050, 1.0503	≤ 800 N/mm²	up to 25 HRC	**170 – 200**	**210 – 240**	**250 – 270**
P2	**Heat treated steels**	D2, 4140	1.2367, 1.2379, 1.2363, 1.7225	> 800 N/mm²	up to 45 HRC	**90 – 110**	**110 – 130**	**130 – 150**
M1	Stainless steels	303, 304	1.4305, 1.4301, 1.4034	≤ 650 N/mm²		40 – 80	40 – 80	40 – 80
M2	Stainless steels	316Ti, 316L	1.4571, 1.4404, 1.4418	> 650 N/mm²		30 – 60	30 – 60	30 – 60
K1	Cast iron	ASTM A48 NO. 30, ASTM A48 NO. 55/60, G1800	0.6020, 0.6040, 0.7040	≤ 450 N/mm²		110 – 130	140 – 180	200 – 220
K2	Cast iron	ASTM A536 80-55-06, ASTMA536 100-70-06	0.7060, 0.7070	> 450 N/mm²		90 – 110	120 – 150	160 – 180
S1	Titanium & titanium alloys	Ti6Al4V	3.7165			50 – 60	60 – 80	80 – 90
S2	High Temp alloys	Inconel, Nimonic		800 – 1700 N/mm²		30 – 40	30 – 40	30 – 40
N1	Wrought aluminum alloys	A5005, A6061, A7075	3.3315		Si < 9%	120 – 240	120 – 240	120 – 240
N2	Aluminum cast alloys	A310, A400	3.2581		Si > 9%	120 – 240	120 – 240	120 – 240
H1	Hardened steels				45 – 55 HRC	40 – 60	60 – 80	60 – 80

Cutting data are reference values and need to be adjusted according to the application area.

Feed per tooth fz (mm/tooth) in relation with D1 and cutting width ae				
	ø 10	ø 12	ø 16	ø 20
fz	0.03 – 0.09	0.03 – 0.10	0.04 – 0.12	0.05 – 0.13

Cutting data is based on short cylindrical extensions, cutting data for long overhang need to be adjusted.

METRIC

F1004MN – DUO-LOCK® HAIMER MILL Power Series CHAMFER

Technical data and Product characteristics

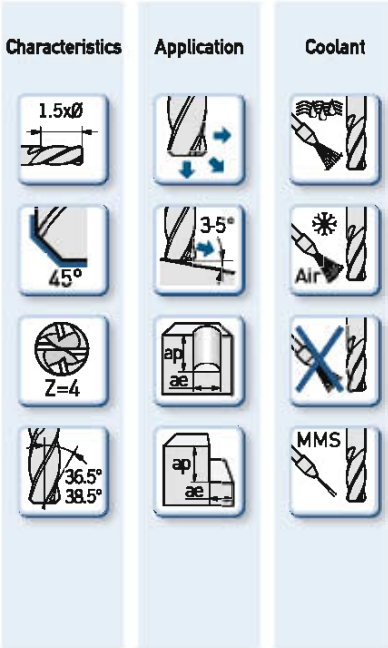

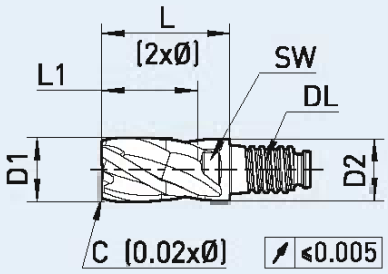

Fine balanced

Material – characteristics

Main Material

P

also suitable for

K S N M H

- Particularly suitable for long overhang and cases of unstable part clamping
- Best results with carbide extension
- Neck for higher cutting depth
- Center cutting
- Unequal cutting edge
- Best length repeatability
- Polished flute and relief

Article-Code	HAIMER Quality	Duo-Lock Size	D1 (f9) [mm]	Cutting edge	Size [mm]	L1 max. [mm]	L [mm]	D2 [mm]	AF [mm]	Torque [N/m]
DL10F1004MN1000C..	DA	DL10	10.00	C	0.20	15	20	9.6	SW8	20
DL12F1004MN1200C..	DA	DL12	12.00	C	0.24	18	24	11.5	SW9.5	30
DL16F1004MN1600C..	DA	DL16	16.00	C	0.32	24	32	15.5	SW13	60
DL20F1004MN2000C..	DA	DL20	20.00	C	0.40	30	40	19.3	SW16	80

Order No. = Article Code + HAIMER Quality.

F1004MN – DUO-LOCK® HAIMER MILL Power Series CHAMFER

INCH

Cutting data

HAIMER Material groups		Example material ANSI	Material no.	Material information: Tensile strength	Content/ Hardness	Cutting width: ae = 100% D1, ap = 1 x D1 — Cutting Speed (SFM)	ae = 50% D1, ap = 1.5 x D1	ae = 25% D1, ap = L1 max.
P1	**General construction steels**	A252, A50-2, 1045	1.0038, 1.0050, 1.0503	≤ 116,000 PSI, 800MPA	up to 25 HRC	**560 - 655**	**690 - 785**	**820 – 885**
P2	**Heat treated steels**	D2, 4140	1.2367, 1.2379, 1.2363, 1.7225	> 116,000 PSI, 800MPA	up to 45 HRC	**295 - 360**	**360 - 425**	**425 – 490**
M1	Stainless steels	303, 304	1.4305, 1.4301, 1.4034	≤ 94,275 PSI, 650MPA		130 - 260	130 - 260	130 - 260
M2	Stainless steels	316Ti, 316L	1.4571, 1.4404, 1.4418	> 94,275 PSI, 650MPA		100 – 195	100 – 195	100 – 195
K1	Cast iron	ASTM A48 NO. 30, ASTM A48 NO. 55/60, G1800	0.6020, 0.6040, 0.7040	≤ 65,265 PSI, 450MPA		360 - 425	460 - 590	655 – 720
K2	Cast iron	ASTM A536 80-55-06, ASTMA536 100-70-06	0.7060, 0.7070	> 65,265 PSI, 450MPA		295 - 360	395 - 490	525 – 590
S1	Titanium & titanium alloys	Ti6Al4V	3.7165			165 - 200	200 - 260	260 – 295
S2	High Temp alloys	Inconel, Nimonic				100 -130	100 -130	100 – 135
N1	Wrought aluminum alloys	A5005, A6061, A7075	3.3315			395 -785	395 -785	395 – 785
N2	Aluminum cast alloys	A310, A400	3.2581		Si >12%	395 -785	395 -785	395 – 785
H1	Hardened steels				45 - 55 HRC	130 - 195	195 -260	195 – 260

Cutting data are reference values and need to be adjusted according to the application area.

Feed per tooth (inch/tooth) in relation with D1 and cutting width ae

Ø	3/8	1/2	5/8	3/4	1	1 1/4
fz	0.0011 - 0.0035	0.0011 - 0.0039	0.0016 - 0.0047	0.002 - 0.005	0.0024 - 0.0067	0.0027 - 0.0079

Cutting data is based on short cylindrical extensions, cutting data for long overhang need to be adjusted.

INCH

F1004MN – DUO-LOCK® HAIMER MILL Power Series CHAMFER

Technical data and Product characteristics

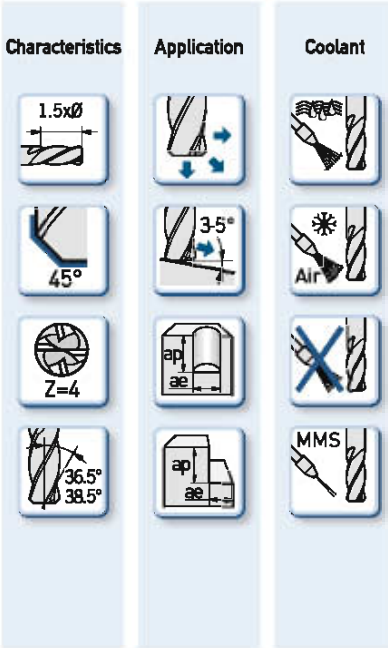

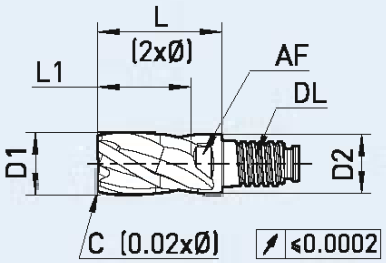

Fine balanced

Material – characteristics

Main Material

P

also suitable for

K S N M H

- Particularly suitable for long overhang and cases of unstable part clamping
- Best results with carbide extension
- Neck for higher cutting depth
- Center cutting
- Unequal cutting edge
- Best length repeatability
- Polished flute and relief

Article-Code	HAIMER Quality	Duo-Lock Size	D1 (f9) [inch]	Cutting edge	Size [inch]	L1 max. [inch]	L [inch]	D2 [inch]	AF [inch]	Torque [N/m]
DL10F1004MN3/8ZC..	DA	DL10	3/8	C	0.008	0.591	0.787	0.359	0.315	20
DL12F1004MN1/2ZC..	DA	DL12	1/2	C	0.010	0.709	0.945	0.480	0.374	30
DL16F1004MN5/8ZC..	DA	DL16	5/8	C	0.013	0.945	1.260	0.605	0.512	60
DL20F1004MN3/4ZC..	DA	DL20	3/4	C	0.015	1.181	1.575	0.730	0.630	80
DL25F1004MN1ZC..	DA	DL25	1	C	0.020	1.476	1.970	0.961	0.827	100
DL32F1004MN11/4ZC..	DA	DL32	11/4	C	0.025	1.890	2.520	1.211	1.102	130

Order No. = Article Code + HAIMER Quality

F1004MN – DUO-LOCK® HAIMER MILL Power Series CORNER RADIUS

METRIC

Cutting data

HAIMER Material groups		Example material ANSI	Material no.	Material information Tensile strength	Content/ Hardness	Cutting width ae = 100% D1 ap = 1 x D1 Cutting speed Vc (m/min)	ae = 50% D1 ap = 1,5 x D1	ae = 25% D1 ap = L1 max.
P1	General construction steels	A252, A50-2, 1045	1.0038, 1.0050, 1.0503	≤ 800 N/mm²	up to 25 HRC	20	30	40
P2	Heat treated steels	D2, 4140	1.2367, 1.2379, 1.2363, 1.7225	> 800 N/mm²	up to 45 HRC	20	30	40
M1	Stainless steels	303, 304	1.4305, 1.4301, 1.4034	≤ 650 N/mm²		10 – 20	10 – 20	10 – 20
M2	Stainless steels	316Ti, 316L	1.4571, 1.4404, 1.4418	> 650 N/mm²		10 – 20	10 – 20	10 – 20
K1	Cast iron	ASTM A48 NO. 30, ASTM A48 NO. 55/60, G1800	0.6020, 0.6040, 0.7040	≤ 450 N/mm²		20 – 30	20 – 30	20 – 30
K2	Cast iron	ASTM A536 80-55-06, ASTMA536 100-70-06	0.7060, 0.7070	> 450 N/mm²		20 – 30	20 – 30	20 – 30
S1	Titanium & titanium alloys	Ti6Al4V	3.7165			10	10	20
S2	High Temp alloys	Inconel, Nimonic		800 – 1700 N/mm²		10	10	20
N1	**Wrought aluminum alloys**	A5005, A6061, A7075	3.3315		Si < 9%	**300 – 400**	**300 – 400**	**400 – 500**
N2	**Aluminum cast alloys**	A310, A400	3.2581		Si > 9%	**300 – 400**	**300 – 400**	**400 – 500**

Cutting data are reference values and need to be adjusted according to the application area.

Feed per tooth fz (mm/tooth) in relation with D1 and cutting width ae	ø 10	ø 12	ø 16	ø 20
fz	0.03 – 0.09	0.03 – 0.10	0.04 – 0.12	0.05 – 0.13

Cutting data is based on short cylindrical extensions, cutting data for long overhang need to be adjusted.

METRIC

F1004MN – DUO-LOCK® HAIMER MILL Power Series CORNER RADIUS UNCOATED

Technical data and Product characteristics

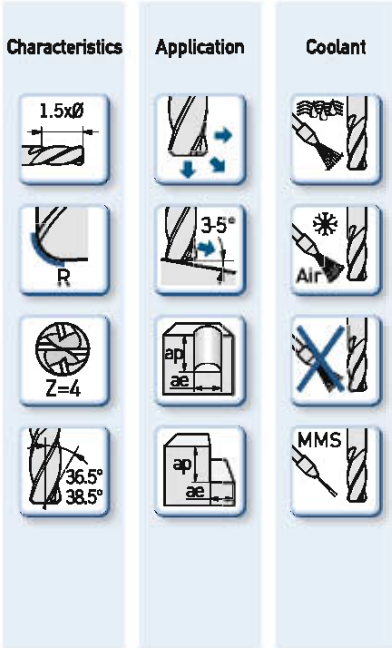

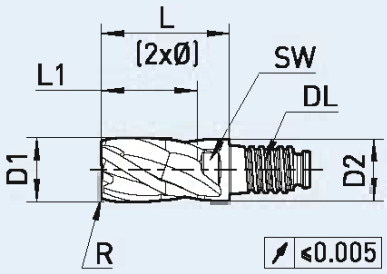

Fine balanced

Material – characteristics

Main Material	also suitable for
N	K, S, M, P

- Particularly suitable for long overhang and cases of unstable part clamping
- Best results with carbide extension
- Neck for higher cutting depth
- Center cutting
- Unequal cutting edge
- Best length repeatability
- Polished flute and relief
- Uncoated

Article-Code	HAIMER Quality	Duo-Lock Size	D1 (f9) [mm]	Cutting edge	R [mm]	L1 max. [mm]	L [mm]	D2 [mm]	AF [mm]	Torque [N/m]
DL10F1004MN1000R0.30..	D-	DL10	10.00	R	0.3	15	20	9.6	SW8	20
DL10F1004MN1000R0.50..	D-	DL10	10.00	R	0.5	15	20	9.6	SW8	20
DL10F1004MN1000R0.80..	D-	DL10	10.00	R	0.8	15	20	9.6	SW8	20
DL10F1004MN1000R1.00..	D-	DL10	10.00	R	1.0	15	20	9.6	SW8	20
DL10F1004MN1000R1.50..	D-	DL10	10.00	R	1.5	15	20	9.6	SW8	20
DL10F1004MN1000R2.00..	D-	DL10	10.00	R	2.0	15	20	9.6	SW8	20
DL10F1004MN1000R2.50..	D-	DL10	10.00	R	2.5	15	20	9.6	SW8	20
DL12F1004MN1200R0.50..	D-	DL12	12.00	R	0.5	18	24	11.5	SW9.5	30
DL12F1004MN1200R0.80..	D-	DL12	12.00	R	0.8	18	24	11.5	SW9.5	30
DL12F1004MN1200R1.00..	D-	DL12	12.00	R	1.0	18	24	11.5	SW9.5	30
DL12F1004MN1200R1.50..	D-	DL12	12.00	R	1.5	18	24	11.5	SW9.5	30
DL12F1004MN1200R2.00..	D-	DL12	12.00	R	2.0	18	24	11.5	SW9.5	30
DL12F1004MN1200R2.50..	D-	DL12	12.00	R	2.5	18	24	11.5	SW9.5	30
DL12F1004MN1200R3.00..	D-	DL12	12.00	R	3.0	18	24	11.5	SW9.5	30

⇨ *Turn page for more articles*

Order No. = Article Code + HAIMER Quality.

F1004MN – DUO-LOCK® HAIMER MILL Power Series CORNER RADIUS

METRIC

Cutting data

HAIMER Material groups		Example material ANSI	Material no.	Material information Tensile strength	Content/ Hardness	Cutting width ae = 100% D1 ap = 1 x D1 Cutting speed Vc (m/min)	ae = 50% D1 ap = 1,5 x D1	ae = 25% D1 ap = L1 max.
P1	General construction steels	A252, A50-2, 1045	1.0038, 1.0050, 1.0503	≤ 800 N/mm²	up to 25 HRC	20	30	40
P2	Heat treated steels	D2, 4140	1.2367, 1.2379, 1.2363, 1.7225	> 800 N/mm²	up to 45 HRC	20	30	40
M1	Stainless steels	303, 304	1.4305, 1.4301, 1.4034	≤ 650 N/mm²		10 – 20	10 – 20	10 – 20
M2	Stainless steels	316Ti, 316L	1.4571, 1.4404, 1.4418	> 650 N/mm²		10 – 20	10 – 20	10 – 20
K1	Cast iron	ASTM A48 NO. 30, ASTM A48 NO. 55/60, G1800	0.6020, 0.6040, 0.7040	≤ 450 N/mm²		20 – 30	20 – 30	20 – 30
K2	Cast iron	ASTM A536 80-55-06, ASTMA536 100-70-06	0.7060, 0.7070	> 450 N/mm²		20 – 30	20 – 30	20 – 30
S1	Titanium & titanium alloys	Ti6Al4V	3.7165			10	10	20
S2	High Temp alloys	Inconel, Nimonic		800 – 1700 N/mm²		10	10	20
N1	**Wrought aluminum alloys**	A5005, A6061, A7075	3.3315		Si < 9%	**300 – 400**	**300 – 400**	**400 – 500**
N2	**Aluminum cast alloys**	A310, A400	3.2581		Si > 9%	**300 – 400**	**300 – 400**	**400 – 500**

Cutting data are reference values and need to be adjusted according to the application area.

Feed per tooth fz (mm/tooth) in relation with D1 and cutting width ae	ø 10	ø 12	ø 16	ø 20
fz	0.03 – 0.09	0.03 – 0.10	0.04 – 0.12	0.05 – 0.13

Cutting data is based on short cylindrical extensions, cutting data for long overhang need to be adjusted.

METRIC

F1004MN – DUO-LOCK® HAIMER MILL Power Series CORNER RADIUS UNCOATED

Technical data and Product characteristics

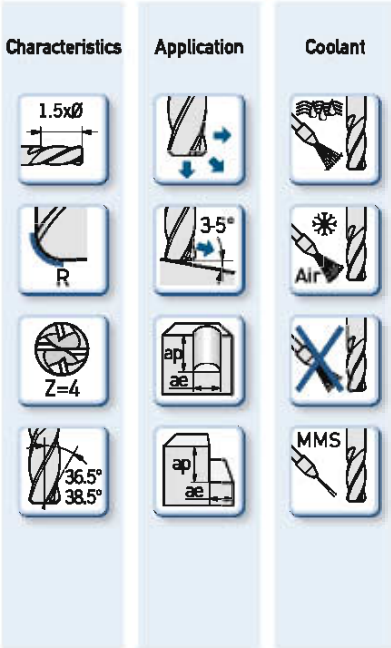

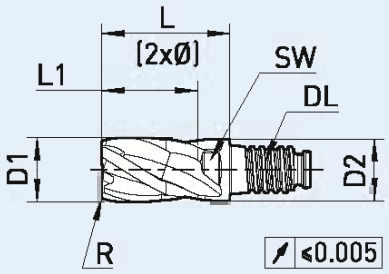

Fine balanced

Material – characteristics

Main Material	also suitable for
N	K, S, M, P

- Particularly suitable for long overhang and cases of unstable part clamping
- Best results with carbide extension
- Neck for higher cutting depth
- Center cutting
- Unequal cutting edge
- Best length repeatability
- Polished flute and relief
- Uncoated

Article-Code	HAIMER Quality	Duo-Lock Size	D1 (f9) [mm]	Cutting edge	R [mm]	L1 max. [mm]	L [mm]	D2 [mm]	AF [mm]	Torque [N/m]
DL12F1004MN1200R4.00..	D-	DL12	12.00	R	4.0	18	24	11.5	SW9.5	30
DL16F1004MN1600R0.50..	D-	DL16	16.00	R	0.5	24	32	15.5	SW13	60
DL16F1004MN1600R0.80..	D-	DL16	16.00	R	0.8	24	32	15.5	SW13	60
DL16F1004MN1600R1.00..	D-	DL16	16.00	R	1.0	24	32	15.5	SW13	60
DL16F1004MN1600R2.00..	D-	DL16	16.00	R	2.0	24	32	15.5	SW13	60
DL16F1004MN1600R2.50..	D-	DL16	16.00	R	2.5	24	32	15.5	SW13	60
DL16F1004MN1600R3.00..	D-	DL16	16.00	R	3.0	24	32	15.5	SW13	60
DL16F1004MN1600R4.00..	D-	DL16	16.00	R	4.0	24	32	15.5	SW13	60
DL20F1004MN2000R0.50..	D-	DL20	20.00	R	0.5	30	40	19.3	SW16	80
DL20F1004MN2000R0.80..	D-	DL20	20.00	R	0.8	30	40	19.3	SW16	80
DL20F1004MN2000R1.00..	D-	DL20	20.00	R	1.0	30	40	19.3	SW16	80
DL20F1004MN2000R2.00..	D-	DL20	20.00	R	2.0	30	40	19.3	SW16	80
DL20F1004MN2000R2.50..	D-	DL20	20.00	R	2.5	30	40	19.3	SW16	80
DL20F1004MN2000R3.00..	D-	DL20	20.00	R	3.0	30	40	19.3	SW16	80
DL20F1004MN2000R4.00..	D-	DL20	20.00	R	4.0	30	40	19.3	SW16	80

Order No. = Article Code + HAIMER Quality.

F1004MN – DUO-LOCK® HAIMER MILL Power Series CORNER RADIUS

METRIC

Cutting data

HAIMER Material groups		Example material ANSI	Material no.	Material information Tensile strength	Content/ Hardness	Cutting width ae = 100% D1 ap = 1 x D1 Cutting speed Vc (m/min)	ae = 50% D1 ap = 1,5 x D1	ae = 25% D1 ap = L1 max.
P1	**General construction steels**	A252, A50-2, 1045	1.0038, 1.0050, 1.0503	≤ 800 N/mm²	up to 25 HRC	**170 – 200**	**210 – 240**	**250 – 270**
P2	**Heat treated steels**	D2, 4140	1.2367, 1.2379, 1.2363, 1.7225	> 800 N/mm²	up to 45 HRC	**90 – 110**	**110 – 130**	**130 – 150**
M1	Stainless steels	303, 304	1.4305, 1.4301, 1.4034	≤ 650 N/mm²		40 – 80	40 – 80	40 – 80
M2	Stainless steels	316Ti, 316L	1.4571, 1.4404, 1.4418	> 650 N/mm²		30 – 60	30 – 60	30 – 60
K1	Cast iron	ASTM A48 NO. 30, ASTM A48 NO. 55/60, G1800	0.6020, 0.6040, 0.7040	≤ 450 N/mm²		110 – 130	140 – 180	200 – 220
K2	Cast iron	ASTM A536 80-55-06, ASTMA536 100-70-06	0.7060, 0.7070	> 450 N/mm²		90 – 110	120 – 150	160 – 180
S1	Titanium & titanium alloys	Ti6Al4V	3.7165			50 – 60	60 – 80	80 – 90
S2	High Temp alloys	Inconel, Nimonic		800 – 1700 N/mm²		30 – 40	30 – 40	30 – 40
N1	Wrought aluminum alloys	A5005, A6061, A7075	3.3315		Si < 9%	120 – 240	120 – 240	120 – 240
N2	Aluminum cast alloys	A310, A400	3.2581		Si > 9%	120 – 240	120 – 240	120 – 240
H1	Hardened steels				45 – 55 HRC	40 – 60	60 – 80	60 – 80

Cutting data are reference values and need to be adjusted according to the application area.

Feed per tooth fz (mm/tooth) in relation with D1 and cutting width ae				
	ø 10	ø 12	ø 16	ø 20
fz	0.03 – 0.09	0.03 – 0.10	0.04 – 0.12	0.05 – 0.13

Cutting data is based on short cylindrical extensions, cutting data for long overhang need to be adjusted.

METRIC

F1004MN – DUO-LOCK® HAIMER MILL Power Series CORNER RADIUS

Technical data and Product characteristics

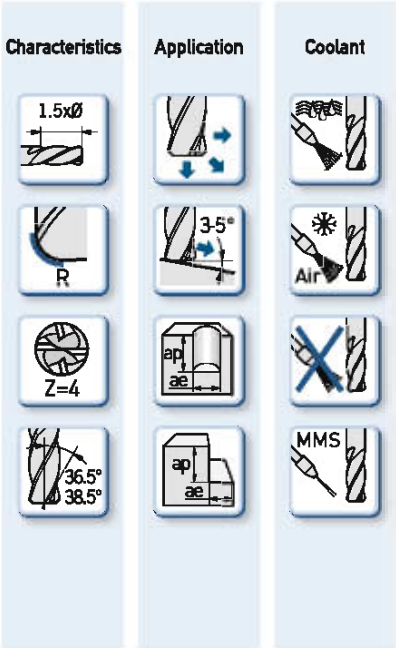

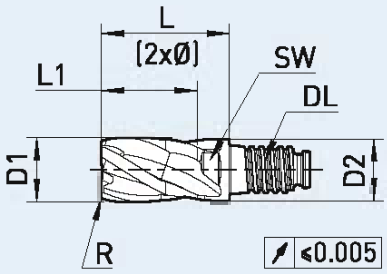

Fine balanced

Material – characteristics

Main Material

P

also suitable for

K S N M H

- Particularly suitable for long overhang and cases of unstable part clamping
- Best results with carbide extension
- Neck for higher cutting depth
- Center cutting
- Unequal cutting edge
- Best length repeatability
- Polished flute and relief

Article-Code	HAIMER Quality	Duo-Lock Size	D1 (f9) [mm]	Cutting edge	R [mm]	L1 max. [mm]	L [mm]	D2 [mm]	AF [mm]	Torque [N/m]
DL10F1004MN1000R0.30..	DA	DL10	10.00	R	0.3	15	20	9.6	SW8	20
DL10F1004MN1000R0.50..	DA	DL10	10.00	R	0.5	15	20	9.6	SW8	20
DL10F1004MN1000R0.80..	DA	DL10	10.00	R	0.8	15	20	9.6	SW8	20
DL10F1004MN1000R1.00..	DA	DL10	10.00	R	1.0	15	20	9.6	SW8	20
DL10F1004MN1000R1.50..	DA	DL10	10.00	R	1.5	15	20	9.6	SW8	20
DL10F1004MN1000R2.00..	DA	DL10	10.00	R	2.0	15	20	9.6	SW8	20
DL10F1004MN1000R2.50..	DA	DL10	10.00	R	2.5	15	20	9.6	SW8	20
DL12F1004MN1200R0.50..	DA	DL12	12.00	R	0.5	18	24	11.5	SW9.5	30
DL12F1004MN1200R0.80..	DA	DL12	12.00	R	0.8	18	24	11.5	SW9.5	30
DL12F1004MN1200R1.00..	DA	DL12	12.00	R	1.0	18	24	11.5	SW9.5	30
DL12F1004MN1200R1.50..	DA	DL12	12.00	R	1.5	18	24	11.5	SW9.5	30
DL12F1004MN1200R2.00..	DA	DL12	12.00	R	2.0	18	24	11.5	SW9.5	30
DL12F1004MN1200R2.50..	DA	DL12	12.00	R	2.5	18	24	11.5	SW9.5	30
DL12F1004MN1200R3.00..	DA	DL12	12.00	R	3.0	18	24	11.5	SW9.5	30

⇨ *Turn page for more articles*

Order No. = Article Code + HAIMER Quality.

F1004MN – DUO-LOCK® HAIMER MILL Power Series CORNER RADIUS

METRIC

Cutting data

HAIMER Material groups		Example material ANSI	Material no.	Material information Tensile strength	Content/ Hardness	Cutting width ae = 100% D1 ap = 1 x D1 Cutting speed Vc (m/min)	ae = 50% D1 ap = 1,5 x D1	ae = 25% D1 ap = L1 max.
P1	**General construction steels**	A252, A50-2, 1045	1.0038, 1.0050, 1.0503	≤ 800 N/mm²	up to 25 HRC	**170 – 200**	**210 – 240**	**250 – 270**
P2	**Heat treated steels**	D2, 4140	1.2367, 1.2379, 1.2363, 1.7225	> 800 N/mm²	up to 45 HRC	**90 – 110**	**110 – 130**	**130 – 150**
M1	Stainless steels	303, 304	1.4305, 1.4301, 1.4034	≤ 650 N/mm²		40 – 80	40 – 80	40 – 80
M2	Stainless steels	316Ti, 316L	1.4571, 1.4404, 1.4418	> 650 N/mm²		30 – 60	30 – 60	30 – 60
K1	Cast iron	ASTM A48 NO. 30, ASTM A48 NO. 55/60, G1800	0.6020, 0.6040, 0.7040	≤ 450 N/mm²		110 – 130	140 – 180	200 – 220
K2	Cast iron	ASTM A536 80-55-06, ASTMA536 100-70-06	0.7060, 0.7070	> 450 N/mm²		90 – 110	120 – 150	160 – 180
S1	Titanium & titanium alloys	Ti6Al4V	3.7165			50 – 60	60 – 80	80 – 90
S2	High Temp alloys	Inconel, Nimonic		800 – 1700 N/mm²		30 – 40	30 – 40	30 – 40
N1	Wrought aluminum alloys	A5005, A6061, A7075	3.3315		Si < 9%	120 – 240	120 – 240	120 – 240
N2	Aluminum cast alloys	A310, A400	3.2581		Si > 9%	120 – 240	120 – 240	120 – 240
H1	Hardened steels				45 – 55 HRC	40 – 60	60 – 80	60 – 80

Cutting data are reference values and need to be adjusted according to the application area.

Feed per tooth fz (mm/tooth) in relation with D1 and cutting width ae				
	ø 10	ø 12	ø 16	ø 20
fz	0.03 – 0.09	0.03 – 0.10	0.04 – 0.12	0.05 – 0.13

Cutting data is based on short cylindrical extensions, cutting data for long overhang need to be adjusted.

METRIC

F1004MN – DUO-LOCK® HAIMER MILL Power Series CORNER RADIUS

Technical data and Product characteristics

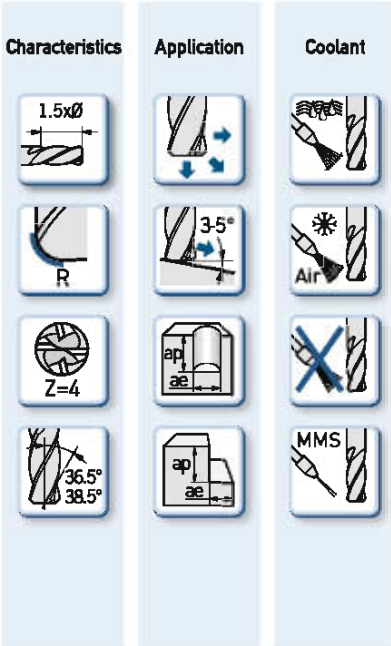

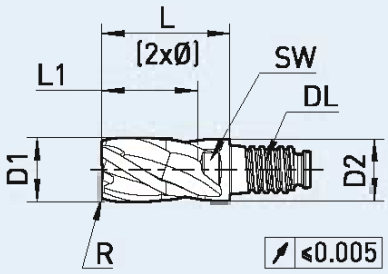

Fine balanced

Material – characteristics

Main Material

P

also suitable for

K S N M H

- Particularly suitable for long overhang and cases of unstable part clamping
- Best results with carbide extension
- Neck for higher cutting depth
- Center cutting
- Unequal cutting edge
- Best length repeatability
- Polished flute and relief

Article-Code	HAIMER Quality	Duo-Lock Size	D1 (f9) [mm]	Cutting edge	R [mm]	L1 max. [mm]	L [mm]	D2 [mm]	AF [mm]	Torque [N/m]
DL12F1004MN1200R4.00..	DA	DL12	12.00	R	4.0	18	24	11.5	SW9.5	30
DL16F1004MN1600R0.50..	DA	DL16	16.00	R	0.5	24	32	15.5	SW13	60
DL16F1004MN1600R0.80..	DA	DL16	16.00	R	0.8	24	32	15.5	SW13	60
DL16F1004MN1600R1.00..	DA	DL16	16.00	R	1.0	24	32	15.5	SW13	60
DL16F1004MN1600R2.00..	DA	DL16	16.00	R	2.0	24	32	15.5	SW13	60
DL16F1004MN1600R2.50..	DA	DL16	16.00	R	2.5	24	32	15.5	SW13	60
DL16F1004MN1600R3.00..	DA	DL16	16.00	R	3.0	24	32	15.5	SW13	60
DL16F1004MN1600R4.00..	DA	DL16	16.00	R	4.0	24	32	15.5	SW13	60
DL20F1004MN2000R0.50..	DA	DL20	20.00	R	0.5	30	40	19.3	SW16	80
DL20F1004MN2000R0.80..	DA	DL20	20.00	R	0.8	30	40	19.3	SW16	80
DL20F1004MN2000R1.00..	DA	DL20	20.00	R	1.0	30	40	19.3	SW16	80
DL20F1004MN2000R2.00..	DA	DL20	20.00	R	2.0	30	40	19.3	SW16	80
DL20F1004MN2000R2.50..	DA	DL20	20.00	R	2.5	30	40	19.3	SW16	80
DL20F1004MN2000R3.00..	DA	DL20	20.00	R	3.0	30	40	19.3	SW16	80
DL20F1004MN2000R4.00..	DA	DL20	20.00	R	4.0	30	40	19.3	SW16	80

Order No. = Article Code + HAIMER Quality.

F1105LL – DUO-LOCK® HAIMER MILL Power Series CHAMFER CHIP BREAKER

METRIC

Cutting data

HAIMER Material groups		Example material		Material information		ap ae ae = 5% D1 ap = L1 max.	
		ANSI	Material no.	Tensile strength	Content/ Hardness	Roughing Vc (m/min)	Finishing Vc (m/min)
P1	**General construction steels**	A252, A50-2, 1045	1.0038, 1.0050, 1.0503	≤ 800 N/mm²	up to 25 HRC	**160 – 220**	**220 – 280**
P2	**Heat treated steels**	D2, 4140	1.2367, 1.2379, 1.2363, 1.7225	> 800 N/mm²	up to 45 HRC	**120 – 160**	**160 – 200**
M1	Stainless steels	303, 304	1.4305, 1.4301, 1.4034	≤ 650 N/mm²		80 – 120	120 – 160
K1	Cast iron	ASTM A48 NO. 30, ASTM A48 NO. 55/60, G1800	0.6020, 0.6040, 0.7040	≤ 450 N/mm²		120 – 180	180 – 240
K2	Cast iron	ASTM A536 80-55-06, ASTMA536 100-70-06	0.7060, 0.7070	> 450 N/mm²		80 – 160	160 – 220
S1	Titanium & titanium alloys	Ti6Al4V	3.7165			40 – 80	40 – 80
N1	Wrought aluminum alloys	A5005, A6061, A7075	3.3315		Si < 9%	500 – 900	500 – 900
N2	Aluminum cast alloys	A310, A400	3.2581		Si > 9%	120 – 350	120 – 350
H1	Hardened steels				45 – 55 HRC	40 – 60	60 – 80

Cutting data are reference values and need to be adjusted according to the application area.

Feed per tooth Fz (mm/tooth) in relation with D1 and cutting width ae				
ae 5%	ø 16	ø 20	ø 25	ø 32
fz	0.04 – 0.12	0.05 – 0.13	0.06 – 0.17	0.07 – 0.20

Cutting data is based on short cylindrical extensions, cutting data for long overhang need to be adjusted.

METRIC

F1105LL – DUO-LOCK® HAIMER MILL Power Series CHAMFER CHIP BREAKER

Technical data and Product characteristics

Characteristics

Application

Coolant

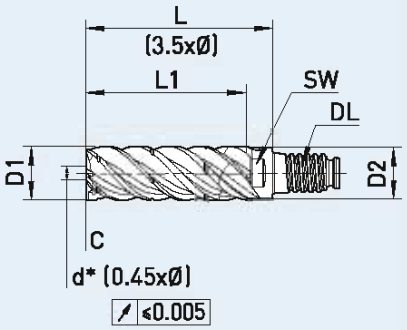

Fine balanced
* diameter not center cutting

Material – characteristics

Main Material

P

also suitable for

K S N M H

- Neck for higher cutting depth
- Unequal cutting edge
- Best length repeatability
- Polishsd flute and relief

Article-Code	HAIMER Quality	Duo-Lock Size	D1 (h9) [mm]	Cutting edge	Size [mm]	L1 max. [mm]	L [mm]	D2 [mm]	AF [mm]	Torque [N/m]
DL16F1105LL1600C..	DA	DL16	16.00	C	0.50	48	56	15.5	SW13	60
DL20F1105LL2000C..	DA	DL20	20.00	C	0.60	60	70	19.3	SW16	80
DL25F1105LL2500C..	DA	DL25	25.00	C	0.60	75	87.5	24.0	SW21	100
DL32F1105LL3200C..	DA	DL32	32.00	C	0.70	96	112	31.0	SW28	130

Order No. = Article Code + HAIMER Quality.

F1105MN – DUO-LOCK® HAIMER MILL Power Series CHAMFER CHIP BREAKER

METRIC

Cutting data

HAIMER Material groups		Example material		Material information			
		ANSI	Material no.	Tensile strength	Content/ Hardness	Roughing Vc (m/min)	Finishing Vc (m/min)
P1	**General construction steels**	A252, A50-2, 1045	1.0038, 1.0050, 1.0503	≤ 800 N/mm²	up to 25 HRC	**160 – 220**	**220 – 280**
P2	**Heat treated steels**	D2, 4140	1.2367, 1.2379, 1.2363, 1.7225	> 800 N/mm²	up to 45 HRC	**120 – 160**	**160 – 200**
M1	Stainless steels	303, 304	1.4305, 1.4301, 1.4034	≤ 650 N/mm²		80 – 120	120 – 160
K1	Cast iron	ASTM A48 NO. 30, ASTM A48 NO. 55/60, G1800	0.6020, 0.6040, 0.7040	≤ 450 N/mm²		120 – 180	180 – 240
K2	Cast iron	ASTM A536 80-55-06, ASTMA536 100-70-06	0.7060, 0.7070	> 450 N/mm²		80 – 160	160 – 220
S1	Titanium & titanium alloys	Ti6Al4V	3.7165			40 – 80	40 – 80
N1	Wrought aluminum alloys	A5005, A6061, A7075	3.3315		Si < 9%	500 – 900	500 – 900
N2	Aluminum cast alloys	A310, A400	3.2581		Si > 9%	120 – 350	120 – 350
H1	Hardened steels				45 – 55 HRC	40 – 60	60 – 80

Cutting data are reference values and need to be adjusted according to the application area.

Feed per tooth Fz (mm/tooth) in relation with D1 and cutting width ae						
	ø 10	ø 12	ø 16	ø 20	ø 25	ø 32
fz	0.03 – 0.09	0.03 – 0.10	0.04 – 0.12	0.05 – 0.13	0.06 – 0.17	0.07 – 0.20

Cutting data is based on short cylindrical extensions, cutting data for long overhang need to be adjusted.

METRIC

F1105MN – DUO-LOCK® HAIMER MILL Power Series CHAMFER CHIP BREAKER

Technical data and Product characteristics

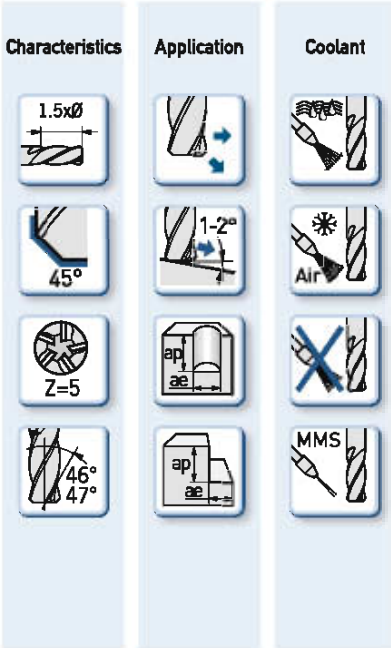

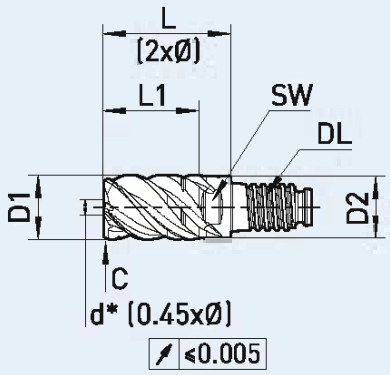

Fine balanced
* diameter not center cutting

Material – characteristics

Main Material

P

also suitable for

K S N M H

- Neck for higher cutting depth
- Unequal cutting edge
- Best length repeatability
- Polishsd flute and relief

Article-Code	HAIMER Quality	Duo-Lock Size	D1 (h9) [mm]	Cutting edge	Size [mm]	L1 max. [mm]	L [mm]	D2 [mm]	AF [mm]	Torque [N/m]
DL10F1105MN1000C..	DA	DL10	10.00	C	0.30	15	20	9.6	SW8	20
DL12F1105MN1200C..	DA	DL12	12.00	C	0.30	18	24	11.5	SW9.5	30
DL16F1105MN1600C..	DA	DL16	16.00	C	0.50	24	32	15.5	SW13	60
DL20F1105MN2000C..	DA	DL20	20.00	C	0.60	30	40	19.3	SW16	80
DL25F1105MN2500C..	DA	DL25	25.00	C	0.60	37.5	50	24.0	SW21	100
DL32F1105MN3200C..	DA	DL32	32.00	C	0.70	48	64	31.0	SW28	130

Order No. = Article Code + HAIMER Quality.

F2003MN - DUO-LOCK® HAIMER MILL SHARP CUTTING EDGE

METRIC

Cutting data

HAIMER Material groups		Example material ANSI	Material no.	Material information Tensile strength	Content/ Hardness	Roughing Vc (m/min)	Finishing Vc (m/min)
P1	**General construction steels**	A252, A50-2, 1045	1.0038, 1.0050, 1.0503	≤ 800 N/mm²	up to 25 HRC	**160 – 220**	**220 – 280**
P2	**Heat treated steels**	D2, 4140	1.2367, 1.2379, 1.2363, 1.7225	> 800 N/mm²	up to 45 HRC	**120 – 160**	**160 – 200**
M1	Stainless steels	303, 304	1.4305, 1.4301, 1.4034	≤ 650 N/mm²		80 – 120	120 – 160
M2	Stainless steels	316Ti, 316L	1.4571, 1.4404, 1.4418	> 650 N/mm²		60 – 90	90 – 120
K1	Cast iron	ASTM A48 NO. 30, ASTM A48 NO. 55/60, G1800	0.6020, 0.6040, 0.7040	≤ 450 N/mm²		120 – 180	180 – 240
K2	Cast iron	ASTM A536 80-55-06, ASTMA536 100-70-06	0.7060, 0.7070	> 450 N/mm²		80 – 160	160 – 220
S1	Titanium & titanium alloys	Ti6Al4V	3.7165			40 – 80	40 – 80
S2	High Temp alloys	Inconel, Nimonic		800 – 1700 N/mm²		30 – 40	30 – 40
N1	Wrought aluminum alloys	A5005, A6061, A7075	3.3315		Si < 9%	500 – 900	500 – 900
N2	Aluminum cast alloys	A310, A400	3.2581		Si > 9%	120 – 350	120 – 350
H1	Hardened steels				45 – 55 HRC	40 – 60	60 – 80

Cutting data are reference values and need to be adjusted according to the application area.

Feed per tooth fz (mm/tooth) in relation with D1 and cutting width ae

	ø 2	ø 3	ø 4	ø 5	ø 6	ø 8	ø 10	ø 12	ø 16	ø 20
fz	0.006 – 0.018	0.009 – 0.027	0.012 – 0.036	0.015 – 0.045	0.018 – 0.054	0.024 – 0.072	0.03 – 0.09	0.03 – 0.10	0.04 – 0.12	0.05 – 0.13

Cutting data is based on short cylindrical extensions, cutting data for long overhang need to be adjusted.

METRIC

F2003MN - DUO-LOCK® HAIMER MILL SHARP CUTTING EDGE

Technical data and Product characteristics

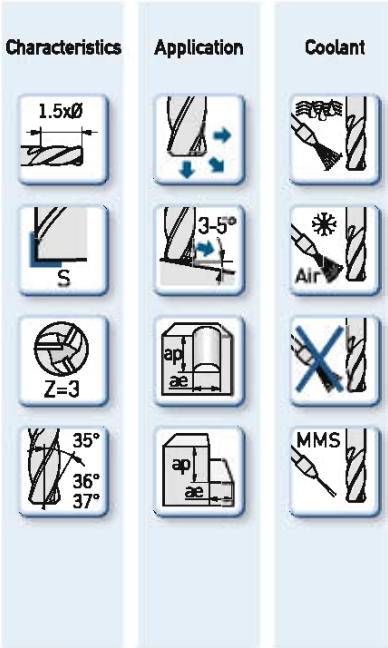

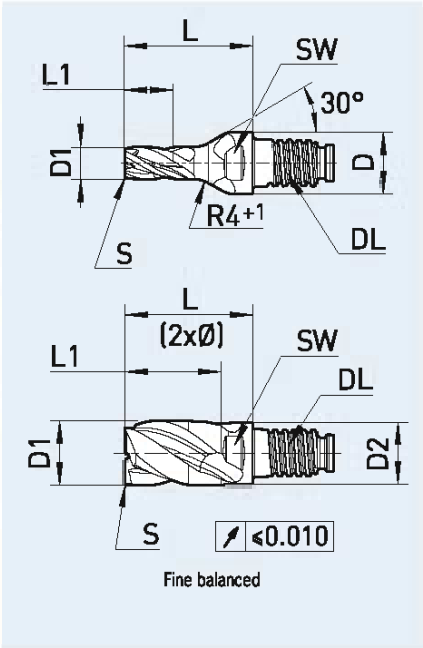

Material – characteristics

Main Material	also suitable for
P	K S N M H

- Neck for higher cutting depth
- Center cutting
- Unequal cutting edge
- Best length repeatability
- ø 2 – ø 8 mm for universal use with DL10 interface (without neck)

Article-Code	HAIMER Quality	Duo-Lock Size	D1 (f9) [mm]	Cutting edge	L1 max. [mm]	L [mm]	D [mm]	AF [mm]	Torque [N/m]
DL10F2003MN0200S..	DA	DL10	2.00	S	3.0	20	9.6	SW8	20
DL10F2003MN0300S..	DA	DL10	3.00	S	4.5	20	9.6	SW8	20
DL10F2003MN0400S..	DA	DL10	4.00	S	6.0	20	9.6	SW8	20
DL10F2003MN0500S..	DA	DL10	5.00	S	7.5	20	9.6	SW8	20
DL10F2003MN0600S..	DA	DL10	6.00	S	9.0	20	9.6	SW8	20
DL10F2003MN0800S..	DA	DL10	8.00	S	12.0	20	9.6	SW8	20
DL10F2003MN1000S..	DA	DL10	10.00	S	15	20	9.6	SW8	20
DL12F2003MN1200S..	DA	DL12	12.00	S	18	24	11.5	SW9.5	30
DL16F2003MN1600S..	DA	DL16	16.00	S	24	32	15.5	SW13	60
DL20F2003MN2000S..	DA	DL20	20.00	S	30	40	19.3	SW16	80

Order No. = Article Code + HAIMER Quality.

F2003MN – DUO-LOCK® HAIMER MILL SHARP CUTTING EDGE

INCH

Cutting data

HAIMER Material groups		Example material ANSI	Material no.	Material information Tensile strength	Content/ Hardness	Cutting width Roughing Cutting Speed (SFM)	Finishing
P1	**General construction steels**	A252, A50-2, 1045	1.0038, 1.0050, 1.0503	≤ 116,000 PSI, 800MPA	up to 25 HRC	**525 - 725**	**725 - 920**
P2	**Heat treated steels**	D2, 4140	1.2367, 1.2379, 1.2363, 1.7225	> 116,000 PSI, 800MPA	up to 45 HRC	**395 - 525**	**525 - 655**
M1	Stainless steels	303, 304	1.4305, 1.4301, 1.4034	≤ 94,275 PSI, 650MPA		260 - 395	395 - 525
M2	Stainless steels	316Ti, 316L	1.4571, 1.4404, 1.4418	> 94,275 PSI, 650MPA		195 - 295	295 - 395
K1	Cast iron	ASTM A48 NO. 30, ASTM A48 NO. 55/60, G1800	0.6020, 0.6040, 0.7040	≤ 65,265 PSI, 450MPA		395 - 590	590 - 785
K2	Cast iron	ASTM A536 80-55-06, ASTMA536 100-70-06	0.7060, 0.7070	> 65,265 PSI, 450MPA		260 - 525	525 - 720
S1	Titanium & titanium alloys	Ti6Al4V	3.7165			130 - 260	130 - 260
S2	High Temp alloys	Inconel, Nimonic				100 -130	100 -130
N1	Wrought aluminum alloys	A5005, A6061, A7075	3.3315			1640 -2950	1640 -2950
N2	Aluminum cast alloys	A310, A400	3.2581		Si >12%	395 -1150	395 -1150
H1	Hardened steels				45 - 55 HRC	130 - 195	195 -260

Cutting data are reference values and need to be adjusted according to the application area.

Feed per tooth (inch/tooth) in relation with D1 and cutting width ae				
Ø	3/8	1/2	5/8	3/4
fz	0.0011 - 0.0035	0.0011 - 0.0039	0.0016 - 0.0047	0.002 - 0.005

Cutting data is based on short cylindrical extensions, cutting data for long overhang need to be adjusted.

INCH

F2003MN – DUO-LOCK® HAIMER MILL SHARP CUTTING EDGE

Technical data and Product characteristics

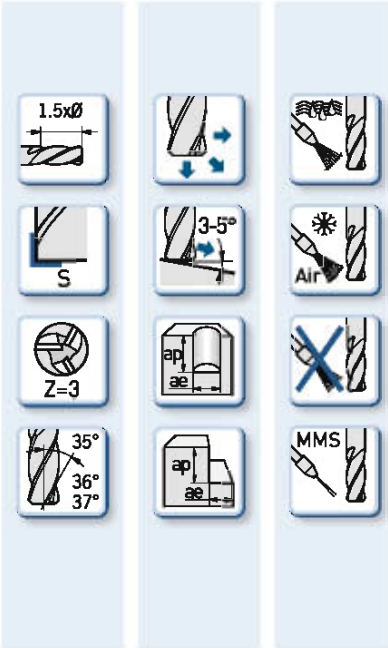

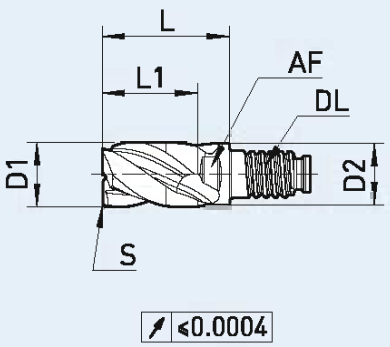

Fine balanced

Material – characteristics

Main Material

P

also suitable for

K S N M H

- Neck for higher cutting depth
- Center cutting
- Unequal cutting edge
- Best length repeatability

Article-Code	HAIMER Quality	Duo-Lock Size	D1 (f9) [inch]	Cutting edge	L1 max. [inch]	L [inch]	D2 [inch]	AF [inch]	Torque [N/m]
DL10F2003MN3/8ZS..	DA	DL10	3/8	S	0.591	0.787	0.359	0.315	20
DL12F2003MN1/2ZS..	DA	DL12	1/2	S	0.709	0.945	0.480	0.374	30
DL16F2003MN5/8ZS..	DA	DL16	5/8	S	0.945	1.260	0.605	0.512	60
DL20F2003MN3/4ZS..	DA	DL20	3/4	S	1.181	1.575	0.730	0.630	80

Order No. = Article Code + HAIMER Quality

F2003UK – DUO-LOCK® HAIMER MILL SHARP CUTTING EDGE

METRIC

Cutting data

HAIMER Material groups		Example material ANSI	Material no.	Material information Tensile strength	Content/ Hardness	Roughing Vc (m/min)	Finishing Vc (m/min)
P1	**General construction steels**	A252, A50-2, 1045	1.0038, 1.0050, 1.0503	≤ 800 N/mm²	up to 25 HRC	**160 – 220**	**220 – 280**
P2	**Heat treated steels**	D2, 4140	1.2367, 1.2379, 1.2363, 1.7225	> 800 N/mm²	up to 45 HRC	**120 – 160**	**160 – 200**
M1	Stainless steels	303, 304	1.4305, 1.4301, 1.4034	≤ 650 N/mm²		80 – 120	120 – 160
M2	Stainless steels	316Ti, 316L	1.4571, 1.4404, 1.4418	> 650 N/mm²		60 – 90	90 – 120
K1	Cast iron	ASTM A48 NO. 30, ASTM A48 NO. 55/60, G1800	0.6020, 0.6040, 0.7040	≤ 450 N/mm²		120 – 180	180 – 240
K2	Cast iron	ASTM A536 80-55-06, ASTMA536 100-70-06	0.7060, 0.7070	> 450 N/mm²		80 – 160	160 – 220
S1	Titanium & titanium alloys	Ti6Al4V	3.7165			40 – 80	40 – 80
S2	High Temp alloys	Inconel, Nimonic		800 – 1700 N/mm²		30 – 40	30 – 40
N1	Wrought aluminum alloys	A5005, A6061, A7075	3.3315		Si < 9%	500 – 900	500 – 900
N2	Aluminum cast alloys	A310, A400	3.2581		Si > 9%	120 – 350	120 – 350
H1	Hardened steels				45 – 55 HRC	40 – 60	60 – 80

Cutting data are reference values and need to be adjusted according to the application area.

Feed per tooth fz (mm/tooth) in relation with D1 and cutting width ae				
	ø 10	ø 12	ø 16	ø 20
fz	0.03 – 0.09	0.03 – 0.10	0.04 – 0.12	0.05 – 0.13

Cutting data is based on short cylindrical extensions, cutting data for long overhang need to be adjusted.

METRIC

F2003UK – DUO-LOCK® HAIMER MILL SHARP CUTTING EDGE

Technical data and Product characteristics

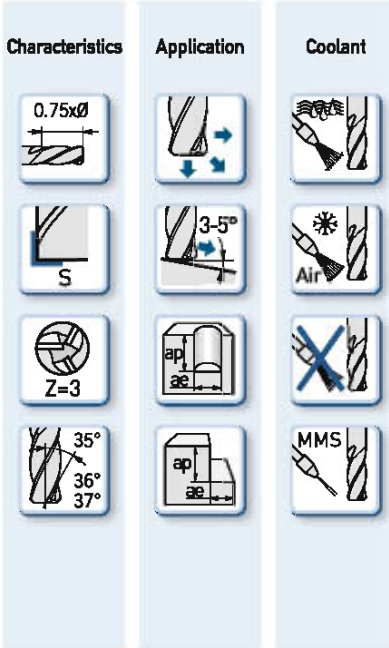

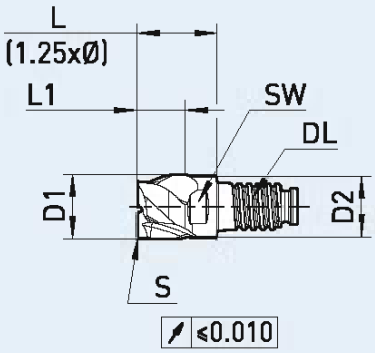

Fine balanced

Material – characteristics

Main Material

P

also suitable for

K S N M H

- Neck for higher cutting depth
- Center cutting
- Unequal cutting edge
- Best length repeatability

Article-Code	HAIMER Quality	Duo-Lock Size	D1 (f9) [mm]	Cutting edge	L1 max. [mm]	L [mm]	D2 [mm]	AF [mm]	Torque [N/m]
DL10F2003UK1000S..	DA	DL10	10.00	S	7.5	12.5	9.6	SW8	20
DL12F2003UK1200S..	DA	DL12	12.00	S	9	15	11.5	SW9.5	30
DL16F2003UK1600S..	DA	DL16	16.00	S	12	20	15.5	SW13	60
DL20F2003UK2000S..	DA	DL20	20.00	S	15	25	19.3	SW16	80

Order No. = Article Code + HAIMER Quality.

F2003UK – DUO-LOCK® HAIMER MILL SHARP CUTTING EDGE

INCH

Cutting data

HAIMER Material groups		Example material ANSI	Material no.	Material information Tensile strength	Content/ Hardness	Cutting width Roughing Cutting Speed (SFM)	Finishing
P1	**General construction steels**	A252, A50-2, 1045	1.0038, 1.0050, 1.0503	≤ 116,000 PSI, 800MPA	up to 25 HRC	**525 - 725**	**725 - 920**
P2	**Heat treated steels**	D2, 4140	1.2367, 1.2379, 1.2363, 1.7225	> 116,000 PSI, 800MPA	up to 45 HRC	**395 - 525**	**525 - 655**
M1	Stainless steels	303, 304	1.4305, 1.4301, 1.4034	≤ 94,275 PSI, 650MPA		260 - 395	395 - 525
M2	Stainless steels	316Ti, 316L	1.4571, 1.4404, 1.4418	> 94,275 PSI, 650MPA		195 - 295	295 - 395
K1	Cast iron	ASTM A48 NO. 30, ASTM A48 NO. 55/60, G1800	0.6020, 0.6040, 0.7040	≤ 65,265 PSI, 450MPA		395 - 590	590 - 785
K2	Cast iron	ASTM A536 80-55-06, ASTMA536 100-70-06	0.7060, 0.7070	> 65,265 PSI, 450MPA		260 - 525	525 - 720
S1	Titanium & titanium alloys	Ti6Al4V	3.7165			130 - 260	130 - 260
S2	High Temp alloys	Inconel, Nimonic				100 -130	100 -130
N1	Wrought aluminum alloys	A5005, A6061, A7075	3.3315			1640 -2950	1640 -2950
N2	Aluminum cast alloys	A310, A400	3.2581		Si >12%	395 -1150	395 -1150
H1	Hardened steels				45 - 55 HRC	130 - 195	195 -260

Cutting data are reference values and need to be adjusted according to the application area.

Feed per tooth (inch/tooth) in relation with D1 and cutting width ae				
Ø	3/8	1/2	5/8	3/4
fz	0.0011 - 0.0035	0.0011 - 0.0039	0.0016 - 0.0047	0.002 - 0.005

Cutting data is based on short cylindrical extensions, cutting data for long overhang need to be adjusted.

INCH

F2003UK – DUO-LOCK® HAIMER MILL SHARP CUTTING EDGE

Technical data and Product characteristics

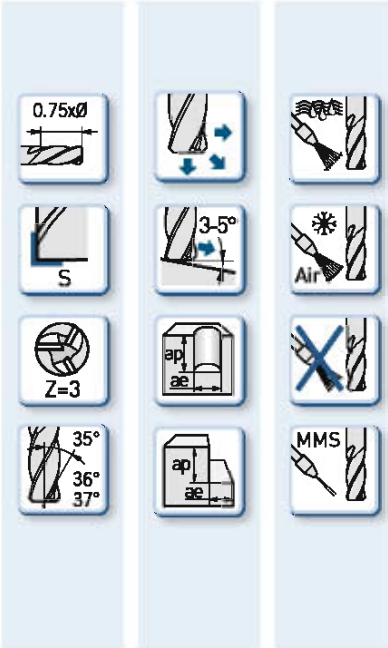

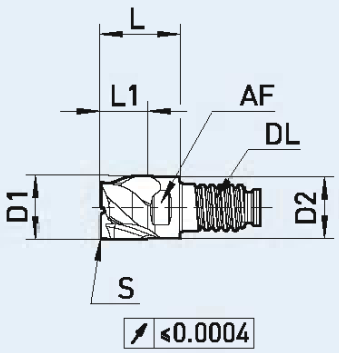

Fine balanced

Material – characteristics

Main Material

P

also suitable for

K S N M H

- Neck for higher cutting depth
- Center cutting
- Unequal cutting edge
- Best length repeatability

Article-Code	HAIMER Quality	Duo-Lock Size	D1 (f9) [inch]	Cutting edge	L1 max. [inch]	L [inch]	D2 [inch]	AF [inch]	Torque [N/m]
DL10F2003UK3/8ZS..	DA	DL10	3/8	S	0.295	0.492	0.359	0.315	20
DL12F2003UK1/2ZS..	DA	DL12	1/2	S	0.354	0.591	0.480	0.374	30
DL16F2003UK5/8ZS..	DA	DL16	5/8	S	0.472	0.787	0.605	0.512	60
DL20F2003UK3/4ZS..	DA	DL20	3/4	S	0.591	0.984	0.730	0.630	80

Order No. = Article Code + HAIMER Quality

F2004MN – DUO-LOCK® HAIMER MILL CHAMFER

METRIC

Cutting data

HAIMER Material groups		Example material ANSI	Material no.	Material information Tensile strength	Content/ Hardness	Cutting width Ramping	ae = 100% D1 ap = 1 x D1	ae = 15% D1 ap = L1 max.	ae = 5% D1 ap = L1 max.
							Cutting speed Vc (m/min)		
P1	**General construction steels**	A252, A50-2, 1045	1.0038. 1.0050. 1.0503	≤ 800 N/mm²	up to 25 HRC	**45°**	**255 – 275**	**320 – 340**	**400 – 420**
P2	**Heat treated steels**	D2, 4140	1.2367. 1.2379. 1.2363. 1.7225	> 800 N/mm²	up to 45 HRC	**30°**	**190 – 210**	**220 – 240**	**290 – 310**
M1	**Stainless steels**	303, 304	1.4305. 1.4301. 1.4034	≤ 650 N/mm²		**10°**	**95 – 110**	**115 – 135**	**150 – 170**
M2	**Stainless steels**	316Ti, 316L	1.4571. 1.4404. 1.4418	> 650 N/mm²		**5°**	**75 – 90**	**95 – 105**	**110 – 130**
K1	Cast iron	ASTM A48 NO. 30, ASTM A48 NO. 55/60, G1800	0.6020. 0.6040. 0.7040	≤ 450 N/mm²		45°	160 – 180	180 – 200	210 – 230
K2	Cast iron	ASTM A536 80-55-06, ASTMA536 100-70-06	0.7060. 0.7070	> 450 N/mm²		20°	130 – 150	150 – 170	180 – 200
S1	Titanium & titanium alloys	Ti6Al4V	3.7165			10°	50 – 60	60 – 80	80 – 90
S2	High Temp alloys	Inconel, Nimonic		800 – 1700 N/mm²		5°	30 – 40	30 – 40	30 – 40
N1	Wrought aluminum alloys	A5005, A6061, A7075	3.3315		Si < 9%	30°	470 – 490	600 – 630	780 – 820
N2	Aluminum cast alloys	A310, A400	3.2581		Si > 9%	30°	340 – 360	420 – 440	540 – 580
H1	Hardened steels				45 – 55 HRC	10°	40 – 60	60 – 80	60 – 80

Cutting data are reference values and need to be adjusted according to the application area.
Chip removal recommended for drilling depth 0.5 – 1 x D.

Feed per tooth Fz (mm/tooth) in relation with D1 and cutting width ae

	ø 2	ø 3	ø 4	ø 5	ø 6	ø 8
fz	0.006 – 0.018	0.009 – 0.027	0.012 – 0.036	0.015 – 0.045	0.018 – 0.054	0.024 – 0.072
	ø 10	**ø 12**	**ø 16**	**ø 20**	**ø 25**	**ø 32**
fz	0.03 – 0.09	0.03 – 0.10	0.04 – 0.12	0.05 – 0.13	0.06 – 0.17	0.07 – 0.20

Cutting data is based on short cylindrical extensions, cutting data for long overhang need to be adjusted.

METRIC

F2004MN – DUO-LOCK® HAIMER MILL CHAMFER

Technical data and Product characteristics

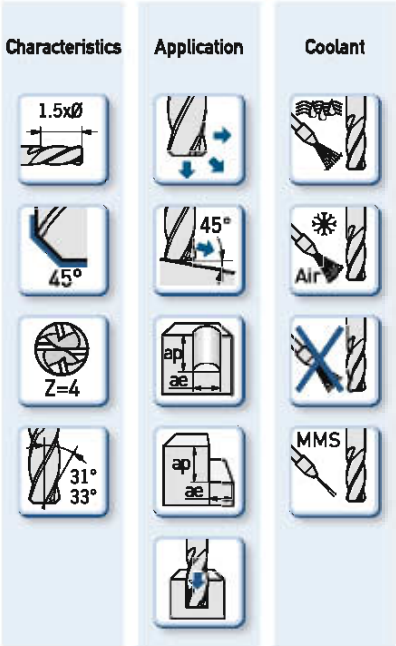

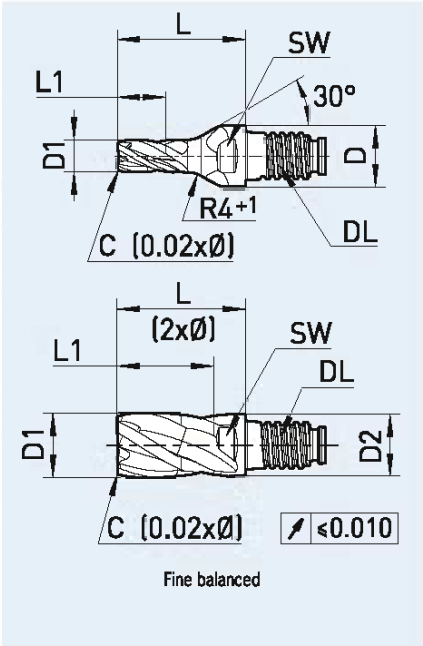

Material – characteristics

Main Material **also suitable for**

P M K S N H

- Neck for higher cutting depth
- Center cutting
- Unequal cutting edge
- Best length repeatability
- ø 2 – ø 8 for universal use with DL10 interface (without neck)

Article-Code	HAIMER Quality	Duo-Lock Size	D1 (f9) [mm]	Cutting edge	Size [mm]	L1 max. [mm]	L [mm]	D [mm]	AF [mm]	Torque [N/m]
DL10F2004MN0200C..	DA	DL10	2.00	C	0.04	3.0	20	9.6	SW8	20
DL10F2004MN0300C..	DA	DL10	3.00	C	0.06	4.5	20	9.6	SW8	20
DL10F2004MN0400C..	DA	DL10	4.00	C	0.08	6.0	20	9.6	SW8	20
DL10F2004MN0500C..	DA	DL10	5.00	C	0.10	7.5	20	9.6	SW8	20
DL10F2004MN0600C..	DA	DL10	6.00	C	0.12	9.0	20	9.6	SW8	20
DL10F2004MN0800C..	DA	DL10	8.00	C	0.16	12.0	20	9.6	SW8	20
DL10F2004MN1000C..	DA	DL10	10.00	C	0.20	15	20	9.6	SW8	20
DL12F2004MN1200C..	DA	DL12	12.00	C	0.24	18	24	11.5	SW9.5	30
DL16F2004MN1600C..	DA	DL16	16.00	C	0.32	24	32	15.5	SW13	60
DL20F2004MN2000C..	DA	DL20	20.00	C	0.40	30	40	19.3	SW16	80
DL25F2004MN2500C..	DA	DL25	25.00	C	0.50	37.5	50	24.0	SW21	100
DL32F2004MN3200C..	DA	DL32	32.00	C	0.64	48	64	31.0	SW28	130

Order No. = Article Code + HAIMER Quality.

F2004MN – DUO-LOCK® HAIMER MILL CHAMFER

INCH

Cutting data

HAIMER Material groups		Example material ANSI	Material no.	Material information Tensile strength	Content/ Hardness	Ramping	Cutting width ae = 100% D1 ap = 1 x D1 Cutting Speed (SFM)	ae = 15% D1 ap = L1 max.	ae = 5% D1 ap = L1 max.
P1	**General construction steels**	A252, A50-2, 1045	1.0038, 1.0050, 1.0503	≤ 116,000 PSI, 800MPA	up to 25 HRC	**45°**	**835 - 900**	**1050 - 1115**	**1310 - 1380**
P2	**Heat treated steels**	D2, 4140	1.2367, 1.2379, 1.2363, 1.7225	> 116,000 PSI, 800MPA	up to 45 HRC	**30°**	**625 - 690**	**720 - 785**	**950 - 1015**
M1	Stainless steels	303, 304	1.4305, 1.4301, 1.4034	≤ 94,275 PSI, 650MPA		10°	310 - 360*	375 - 445	490 - 560
M2	Stainless steels	316Ti, 316L	1.4571, 1.4404, 1.4418	> 94,275 PSI, 650MPA		5°	245 - 295*	310 - 345	360 - 425
K1	Cast iron	ASTM A48 NO. 30, ASTM A48 NO. 55/60, G1800	0.6020, 0.6040, 0.7040	≤ 65,265 PSI, 450MPA		45°	525 - 590	590 - 655	690 - 755
K2	Cast iron	ASTM A536 80-55-06, ASTMA536 100-70-06	0.7060, 0.7070	> 65,265 PSI, 450MPA		20°	425 - 490	490 - 560	590 - 655
S1	Titanium & titanium alloys	Ti6Al4V	3.7165			10°	165 - 195*	195 - 260	260 - 295
S2	High Temp alloys	Inconel, Nimonic				5°	100 -130	100 -130	100 -130
N1	Wrought aluminum alloys	A5005, A6061, A7075	3.3315			30°	1540 - 1610	1970 - 2065	2560 - 2690
N2	Aluminum cast alloys	A310, A400	3.2581		Si >12%	30°	1115 - 1180	1380 - 1440	1770 - 1900
H1	Hardened steels				45 - 55 HRC	10°	130 - 195	195 -260	195 -260

Cutting data are reference values and need to be adjusted according to the application area.
Chip removal recommended for drilling depth 0.5 – 1 x D.

Feed per tooth (inch/tooth) in relation with D1 and cutting width ae

Ø	3/8	1/2	5/8	3/4	1	1 1/4
fz	0.0011 - 0.0035	0.0011 - 0.0039	0.0016 - 0.0047	0.002 - 0.005	0.0024 - 0.0067	0.0027 - 0.0079

Cutting data is based on short cylindrical extensions, cutting data for long overhang need to be adjusted.

INCH

F2004MN – DUO-LOCK® HAIMER MILL CHAMFER

Technical data and Product characteristics

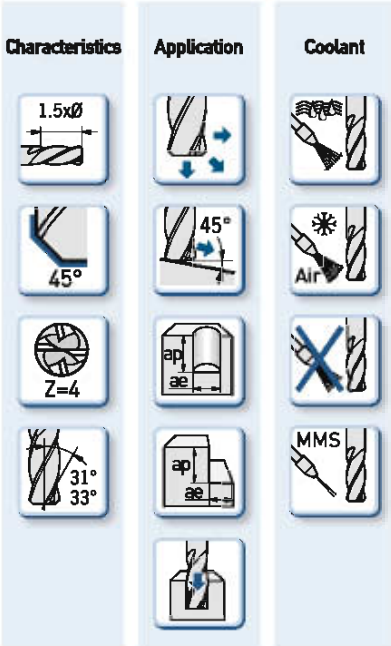

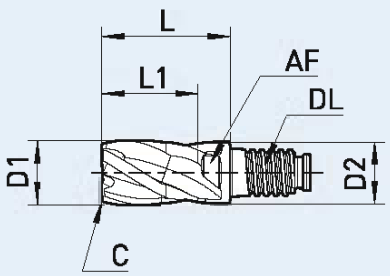

≤0.0004

Fine balanced

Material – characteristics

Main Material

P

also suitable for

K S N M H

- Neck for higher cutting depth
- Center cutting
- Unequal cutting edge
- Best length repeatability

Article-Code	HAIMER Quality	Duo-Lock Size	D1 (f9) [inch]	Cutting edge	Size [inch]	L1 max. [inch]	L [inch]	D2 [inch]	AF [inch]	Torque [N/m]
DL10F2004MN3/8ZC..	DA	DL10	3/8	C	0.008	0.591	0.787	0.359	0.315	20
DL12F2004MN1/2ZC..	DA	DL12	1/2	C	0.010	0.709	0.945	0.480	0.374	30
DL16F2004MN5/8ZC..	DA	DL16	5/8	C	0.013	0.945	1.260	0.605	0.512	60
DL20F2004MN3/4ZC..	DA	DL20	3/4	C	0.015	1.181	1.575	0.730	0.630	80
DL25F2004MN1ZC..	DA	DL25	1	C	0.020	1.476	1.970	0.961	0.827	100
DL32F2004MN11/4ZC..	DA	DL32	11/4	C	0.025	1.890	2.520	1.211	1.102	130

Order No. = Article Code + HAIMER Quality

F2004MN – DUO-LOCK® HAIMER MILL CORNER RADIUS

METRIC

Cutting data

HAIMER Material groups		Example material ANSI	Material no.	Material information Tensile strength	Content/ Hardness	Ramping	Cutting width ae = 100% D1 ap = 1 x D1	ae = 15% D1 ap = L1 max.	ae = 5% D1 ap = L1 max.
							Cutting speed Vc (m/min)		
P1	**General construction steels**	A252, A50-2, 1045	1.0038, 1.0050, 1.0503	≤ 800 N/mm²	up to 25 HRC	**45°**	**255 – 275**	**320 – 340**	**400 – 420**
P2	**Heat treated steels**	D2, 4140	1.2367, 1.2379, 1.2363, 1.7225	> 800 N/mm²	up to 45 HRC	**30°**	**190 – 210**	**220 – 240**	**290 – 310**
M1	**Stainless steels**	303, 304	1.4305, 1.4301, 1.4034	≤ 650 N/mm²		**10°**	**95 – 110**	**115 – 135**	**150 – 170**
M2	**Stainless steels**	316Ti, 316L	1.4571, 1.4404, 1.4418	> 650 N/mm²		**5°**	**75 – 90**	**95 – 105**	**110 – 130**
K1	Cast iron	ASTM A48 NO. 30, ASTM A48 NO. 55/60, G1800	0.6020, 0.6040, 0.7040	≤ 450 N/mm²		45°	160 – 180	180 – 200	210 – 230
K2	Cast iron	ASTM A536 80-55-06, ASTMA536 100-70-06	0.7060, 0.7070	> 450 N/mm²		20°	130 – 150	150 – 170	180 – 200
S1	Titanium & titanium alloys	Ti6Al4V	3.7165			10°	50 – 60	60 – 80	80 – 90
S2	High Temp alloys	Inconel, Nimonic		800 – 1700 N/mm²		5°	30 – 40	30 – 40	30 – 40
N1	Wrought aluminum alloys	A5005, A6061, A7075	3.3315		Si < 9%	30°	470 – 490	600 – 630	780 – 820
N2	Aluminum cast alloys	A310, A400	3.2581		Si > 9%	30°	340 – 360	420 – 440	540 – 580
H1	Hardened steels				45 – 55 HRC	10°	40 – 60	60 – 80	60 – 80

Cutting data are reference values and need to be adjusted according to the application area.
Chip removal recommended for drilling depth 0.5 – 1 x D.

Feed per tooth fz (mm/tooth) in relation with D1 and cutting width ae				
	ø 10	ø 12	ø 16	ø 20
fz	0.03 – 0.09	0.03 – 0.10	0.04 – 0.12	0.05 – 0.13

Cutting data is based on short cylindrical extensions, cutting data for long overhang need to be adjusted.

METRIC

F2004MN – DUO-LOCK® HAIMER MILL CORNER RADIUS

Technical data and Product characteristics

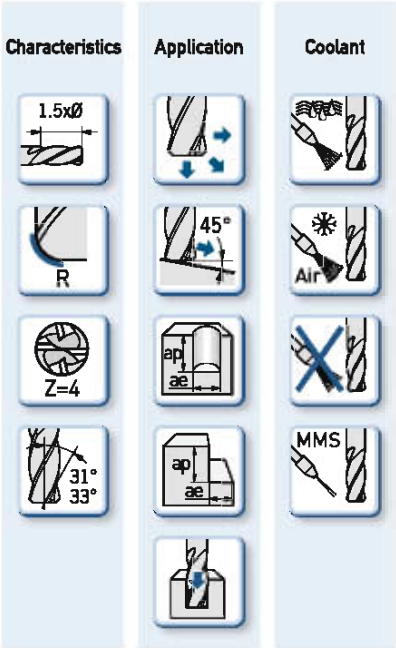

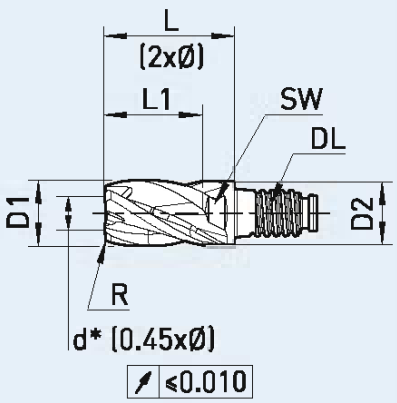

Fine balanced

Material – characteristics

Main Material

P M

also suitable for

K S N H

- Neck for higher cutting depth
- Center cutting
- Unequal cutting edge
- Best length repeatability

Article-Code	HAIMER Quality	Duo-Lock Size	D1 (f9) [mm]	Cutting edge	R [mm]	L1 max. [mm]	L [mm]	D2 [mm]	AF [mm]	Torque [N/m]
DL10F2004MN1000R0.30..	DA	DL10	10.00	R	0.3	15	20	9.6	SW8	20
DL10F2004MN1000R0.50..	DA	DL10	10.00	R	0.5	15	20	9.6	SW8	20
DL10F2004MN1000R0.80..	DA	DL10	10.00	R	0.8	15	20	9.6	SW8	20
DL10F2004MN1000R1.00..	DA	DL10	10.00	R	1.0	15	20	9.6	SW8	20
DL10F2004MN1000R1.50..	DA	DL10	10.00	R	1.5	15	20	9.6	SW8	20
DL10F2004MN1000R2.00..	DA	DL10	10.00	R	2.0	15	20	9.6	SW8	20
DL10F2004MN1000R2.50..	DA	DL10	10.00	R	2.5	15	20	9.6	SW8	20
DL12F2004MN1200R0.50..	DA	DL12	12.00	R	0.5	18	24	11.5	SW9.5	30
DL12F2004MN1200R0.80..	DA	DL12	12.00	R	0.8	18	24	11.5	SW9.5	30
DL12F2004MN1200R1.00..	DA	DL12	12.00	R	1.0	18	24	11.5	SW9.5	30
DL12F2004MN1200R2.00..	DA	DL12	12.00	R	2.0	18	24	11.5	SW9.5	30
DL12F2004MN1200R2.50..	DA	DL12	12.00	R	2.5	18	24	11.5	SW9.5	30
DL12F2004MN1200R3.00..	DA	DL12	12.00	R	3.0	18	24	11.5	SW9.5	30
DL12F2004MN1200R4.00..	DA	DL12	12.00	R	4.0	18	24	11.5	SW9.5	30

⇨ *Turn page for more articles*

Order No. = Article Code + HAIMER Quality.

F2004MN – DUO-LOCK® HAIMER MILL CORNER RADIUS

METRIC

Cutting data

HAIMER Material groups		Example material ANSI	Material no.	Material information Tensile strength	Content/ Hardness	Cutting width Ramping	ae = 100% D1 ap = 1 x D1	ae = 15% D1 ap = L1 max.	ae = 5% D1 ap = L1 max.
						Cutting speed Vc (m/min)			
P1	**General construction steels**	A252, A50-2, 1045	1.0038, 1.0050, 1.0503	≤ 800 N/mm²	up to 25 HRC	**45°**	**255 – 275**	**320 – 340**	**400 – 420**
P2	**Heat treated steels**	D2, 4140	1.2367, 1.2379, 1.2363, 1.7225	> 800 N/mm²	up to 45 HRC	**30°**	**190 – 210**	**220 – 240**	**290 – 310**
M1	**Stainless steels**	303, 304	1.4305, 1.4301, 1.4034	≤ 650 N/mm²		**10°**	**95 – 110**	**115 – 135**	**150 – 170**
M2	**Stainless steels**	316Ti, 316L	1.4571, 1.4404, 1.4418	> 650 N/mm²		**5°**	**75 – 90**	**95 – 105**	**110 – 130**
K1	Cast iron	ASTM A48 NO. 30, ASTM A48 NO. 55/60, G1800	0.6020, 0.6040, 0.7040	≤ 450 N/mm²		45°	160 – 180	180 – 200	210 – 230
K2	Cast iron	ASTM A536 80-55-06, ASTMA536 100-70-06	0.7060, 0.7070	> 450 N/mm²		20°	130 – 150	150 – 170	180 – 200
S1	Titanium & titanium alloys	Ti6Al4V	3.7165			10°	50 – 60	60 – 80	80 – 90
S2	High Temp alloys	Inconel, Nimonic		800 – 1700 N/mm²		5°	30 – 40	30 – 40	30 – 40
N1	Wrought aluminum alloys	A5005, A6061, A7075	3.3315		Si < 9%	30°	470 – 490	600 – 630	780 – 820
N2	Aluminum cast alloys	A310, A400	3.2581		Si > 9%	30°	340 – 360	420 – 440	540 – 580
H1	Hardened steels				45 – 55 HRC	10°	40 – 60	60 – 80	60 – 80

Cutting data are reference values and need to be adjusted according to the application area.
Chip removal recommended for drilling depth 0.5 – 1 x D.

Feed per tooth fz (mm/tooth) in relation with D1 and cutting width ae				
	ø 10	ø 12	ø 16	ø 20
fz	0.03 – 0.09	0.03 – 0.10	0.04 – 0.12	0.05 – 0.13

Cutting data is based on short cylindrical extensions, cutting data for long overhang need to be adjusted.

METRIC

F2004MN – DUO-LOCK® HAIMER MILL CORNER RADIUS

Technical data and Product characteristics

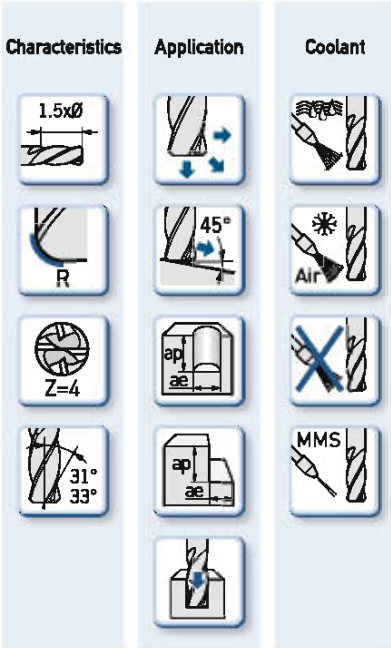

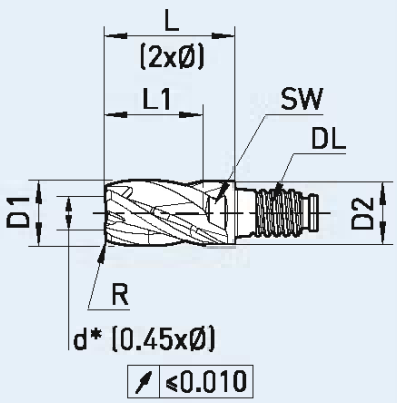

Fine balanced

Material – characteristics

Main Material

P M

also suitable for

K S N H

- Neck for higher cutting depth
- Center cutting
- Unequal cutting edge
- Best length repeatability

Article-Code	HAIMER Quality	Duo-Lock Size	D1 (f9) [mm]	Cutting edge	Size [mm]	L1 max. [mm]	L [mm]	D2 [mm]	AF [mm]	Torque [N/m]
DL16F2004MN1600R0.50..	DA	DL16	16.00	R	0.5	24	32	15.5	SW13	60
DL16F2004MN1600R0.80..	DA	DL16	16.00	R	0.8	24	32	15.5	SW13	60
DL16F2004MN1600R1.00..	DA	DL16	16.00	R	1.0	24	32	15.5	SW13	60
DL16F2004MN1600R2.00..	DA	DL16	16.00	R	2.0	24	32	15.5	SW13	60
DL16F2004MN1600R2.50..	DA	DL16	16.00	R	2.5	24	32	15.5	SW13	60
DL16F2004MN1600R3.00..	DA	DL16	16.00	R	3.0	24	32	15.5	SW13	60
DL16F2004MN1600R4.00..	DA	DL16	16.00	R	4.0	24	32	15.5	SW13	60
DL20F2004MN2000R0.50..	DA	DL20	20.00	R	0.5	30	40	19.3	SW16	80
DL20F2004MN2000R0.80..	DA	DL20	20.00	R	0.8	30	40	19.3	SW16	80
DL20F2004MN2000R2.00..	DA	DL20	20.00	R	2.0	30	40	19.3	SW16	80
DL20F2004MN2000R2.50..	DA	DL20	20.00	R	2.5	30	40	19.3	SW16	80
DL20F2004MN2000R3.00..	DA	DL20	20.00	R	3.0	30	40	19.3	SW16	80
DL20F2004MN2000R4.00..	DA	DL20	20.00	R	4.0	30	40	19.3	SW16	80

Order No. = Article Code + HAIMER Quality.

F2004MN – DUO-LOCK® HAIMER MILL CORNER RADIUS

INCH

Cutting data

HAIMER Material groups		Example material ANSI	Material no.	Material information Tensile strength	Content/ Hardness	Ramping	Cutting width ae = 100% D1 ap = 1 x D1 Cutting Speed (SFM)	ae = 15% D1 ap = L1 max.	ae = 5% D1 ap = L1 max.
P1	**General construction steels**	A252, A50-2, 1045	1.0038, 1.0050, 1.0503	≤ 116,000 PSI, 800MPA	up to 25 HRC	**45°**	**835 - 900**	**1050 - 1115**	**1310 - 1380**
P2	**Heat treated steels**	D2, 4140	1.2367, 1.2379, 1.2363, 1.7225	> 116,000 PSI, 800MPA	up to 45 HRC	**30°**	**625 - 690**	**720 - 785**	**950 - 1015**
M1	Stainless steels	303, 304	1.4305, 1.4301, 1.4034	≤ 94,275 PSI, 650MPA		10°	310 - 360*	375 - 445	490 - 560
M2	Stainless steels	316Ti, 316L	1.4571, 1.4404, 1.4418	> 94,275 PSI, 650MPA		5°	245 - 295*	310 - 345	360 - 425
K1	Cast iron	ASTM A48 NO. 30, ASTM A48 NO. 55/60, G1800	0.6020, 0.6040, 0.7040	≤ 65,265 PSI, 450MPA		45°	525 - 590	590 - 655	690 - 755
K2	Cast iron	ASTM A536 80-55-06, ASTMA536 100-70-06	0.7060, 0.7070	> 65,265 PSI, 450MPA		20°	425 - 490	490 - 560	590 - 655
S1	Titanium & titanium alloys	Ti6Al4V	3.7165			10°	165 - 195*	195 - 260	260 - 295
S2	High Temp alloys	Inconel, Nimonic				5°	100 -130	100 -130	100 -130
N1	Wrought aluminum alloys	A5005, A6061, A7075	3.3315			30°	1540 - 1610	1970 - 2065	2560 - 2690
N2	Aluminum cast alloys	A310, A400	3.2581		Si >12%	30°	1115 - 1180	1380 - 1440	1770 - 1900
H1	Hardened steels				45 - 55 HRC	10°	130 - 195	195 -260	195 -260

Cutting data are reference values and need to be adjusted according to the application area.
Chip removal recommended for drilling depth 0.5 – 1 x D.

Feed per tooth (inch/tooth) in relation with D1 and cutting width ae				
Ø	3/8	1/2	5/8	3/4
fz	0.0011 - 0.0035	0.0011 - 0.0039	0.0016 - 0.0047	0.002 - 0.005

Cutting data is based on short cylindrical extensions, cutting data for long overhang need to be adjusted.

INCH

F2004MN – DUO-LOCK® HAIMER MILL CORNER RADIUS

Technical data and Product characteristics

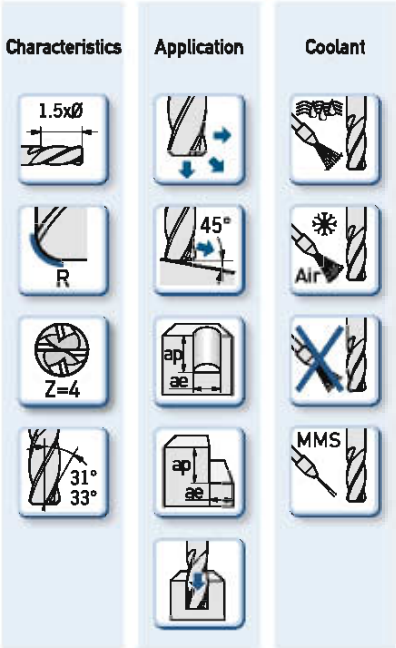

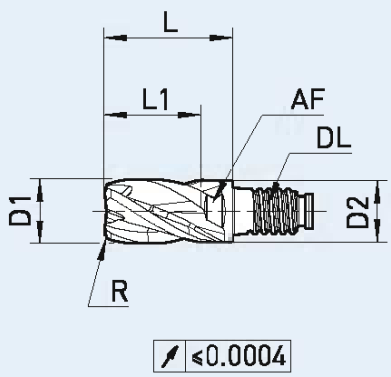

Fine balanced

Material – characteristics

Main Material

P

also suitable for

K S N M H

- Neck for higher cutting depth
- Center cutting
- Unequal cutting edge
- Best length repeatability

Article-Code	HAIMER Quality	Duo-Lock Size	D1 (f9) [inch]	Cutting edge	Size [inch]	L1 max. [inch]	L [inch]	D2 [inch]	AF [inch]	Torque [N/m]
DL10F2004MN3/8ZR.015..	DA	DL10	3/8	R	0.015	0.591	0.787	0.359	0.315	20
DL10F2004MN3/8ZR.030..	DA	DL10	3/8	R	0.030	0.591	0.787	0.359	0.315	20
DL10F2004MN3/8ZR.060..	DA	DL10	3/8	R	0.060	0.591	0.787	0.359	0.315	20
DL12F2004MN1/2ZR.015..	DA	DL12	1/2	R	0.015	0.709	0.945	0.480	0.374	30
DL12F2004MN1/2ZR.030..	DA	DL12	1/2	R	0.030	0.709	0.945	0.480	0.374	30
DL12F2004MN1/2ZR.060..	DA	DL12	1/2	R	0.060	0.709	0.945	0.480	0.374	30
DL16F2004MN5/8ZR.015..	DA	DL16	5/8	R	0.015	0.945	1.260	0.605	0.512	60
DL16F2004MN5/8ZR.030..	DA	DL16	5/8	R	0.030	0.945	1.260	0.605	0.512	60
DL16F2004MN5/8ZR.060..	DA	DL16	5/8	R	0.060	0.945	1.260	0.605	0.512	60
DL16F2004MN5/8ZR.090..	DA	DL16	5/8	R	0.090	0.945	1.260	0.605	0.512	60
DL16F2004MN5/8ZR.125..	DA	DL16	5/8	R	0.125	0.945	1.260	0.605	0.512	60
DL20F2004MN3/4ZR.030..	DA	DL20	3/4	R	0.030	1.181	1.575	0.730	0.630	80
DL20F2004MN3/4ZR.060..	DA	DL20	3/4	R	0.060	1.181	1.575	0.730	0.630	80
DL20F2004MN3/4ZR.090..	DA	DL20	3/4	R	0.090	1.181	1.575	0.730	0.630	80
DL20F2004MN3/4ZR.125..	DA	DL20	3/4	R	0.125	1.181	1.575	0.730	0.630	80
DL20F2004MN3/4ZR.150..	DA	DL20	3/4	R	0.150	1.181	1.575	0.730	0.630	80

Order No. = Article Code + HAIMER Quality

F2004UK – DUO-LOCK® HAIMER MILL CHAMFER

METRIC

Cutting data

HAIMER Material groups		Example material ANSI	Material no.	Material information Tensile strength	Content/ Hardness	Cutting width Ramping	ae = 100% D1 ap = 1 x D1 Cutting speed Vc (m/min)	ae = 15% D1 ap = L1 max.	ae = 5% D1 ap = L1 max.
P1	**General construction steels**	A252, A50-2, 1045	1.0038, 1.0050, 1.0503	≤ 800 N/mm²	up to 25 HRC	**45°**	**255 – 275**	**320 – 340**	**400 – 420**
P2	**Heat treated steels**	D2, 4140	1.2367, 1.2379, 1.2363, 1.7225	> 800 N/mm²	up to 45 HRC	**30°**	**190 – 210**	**220 – 240**	**290 – 310**
M1	**Stainless steels**	303, 304	1.4305, 1.4301, 1.4034	≤ 650 N/mm²		**10°**	**95 – 110**	**115 – 135**	**150 – 170**
M2	**Stainless steels**	316Ti, 316L	1.4571, 1.4404, 1.4418	> 650 N/mm²		**5°**	**75 – 90**	**95 – 105**	**110 – 130**
K1	Cast iron	ASTM A48 NO. 30, ASTM A48 NO. 55/60, G1800	0.6020, 0.6040, 0.7040	≤ 450 N/mm²		45°	160 – 180	180 – 200	210 – 230
K2	Cast iron	ASTM A536 80-55-06, ASTMA536 100-70-06	0.7060, 0.7070	> 450 N/mm²		20°	130 – 150	150 – 170	180 – 200
S1	Titanium & titanium alloys	Ti6Al4V	3.7165			10°	50 – 60	60 – 80	80 – 90
S2	High Temp alloys	Inconel, Nimonic		800 – 1700 N/mm²		5°	30 – 40	30 – 40	30 – 40
N1	Wrought aluminum alloys	A5005, A6061, A7075	3.3315		Si < 9%	30°	470 – 490	600 – 630	780 – 820
N2	Aluminum cast alloys	A310, A400	3.2581		Si > 9%	30°	340 – 360	420 – 440	540 – 580
H1	Hardened steels				45 – 55 HRC	10°	40 – 60	60 – 80	60 – 80

Cutting data are reference values and need to be adjusted according to the application area.
Chip removal recommended for drilling depth 0.5 – 1 x D.

Feed per tooth Fz (mm/tooth) in relation with D1 and cutting width ae

	ø 10	ø 12	ø 16	ø 20	ø 25	ø 32
fz	0.03 – 0.09	0.03 – 0.10	0.04 – 0.12	0.05 – 0.13	0.06 – 0.17	0.07 – 0.20

Cutting data is based on short cylindrical extensions, cutting data for long overhang need to be adjusted.

F2004UK – DUO-LOCK® HAIMER MILL CHAMFER

METRIC

Technical data and Product characteristics

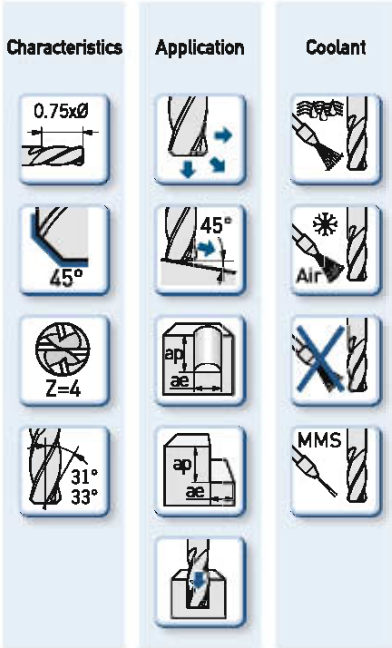

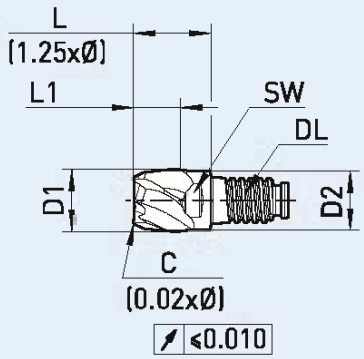

Fine balanced

Material – characteristics

Main Material P M

also suitable for K S N H

- Neck for higher cutting depth
- Center cutting
- Unequal cutting edge
- Best length repeatability

Article-Code	HAIMER Quality	Duo-Lock Size	D1 (f9) [mm]	Cutting edge	Size [mm]	L1 max. [mm]	L [mm]	D2 [mm]	AF [mm]	Torque [N/m]
DL10F2004UK1000C..	DA	DL10	10.00	C	0.20	7.5	12.5	9.6	SW8	20
DL12F2004UK1200C..	DA	DL12	12.00	C	0.24	9	15	11.5	SW9.5	30
DL16F2004UK1600C..	DA	DL16	16.00	C	0.32	12	20	15.5	SW13	60
DL20F2004UK2000C..	DA	DL20	20.00	C	0.40	15	25	19.3	SW16	80
DL25F2004UK2500C..	DA	DL25	25.00	C	0.50	18.75	31.25	24.0	SW21	100
DL32F2004UK3200C..	DA	DL32	32.00	C	0.64	24	40	31.0	SW28	130

Order No. = Article Code + HAIMER Quality.

F2004UK – DUO-LOCK® HAIMER MILL CHAMFER

INCH

Cutting data

HAIMER Material groups		Example material ANSI	Material no.	Material information Tensile strength	Content/ Hardness	Ramping	Cutting width ae = 100% D1 ap = 0.5 x D1 Cutting Speed (SFM)	ae = 15% D1 ap = L1 max.	ae = 5% D1 ap = L1 max.
P1	**General construction steels**	A252, A50-2, 1045	1.0038, 1.0050, 1.0503	≤ 116,000 PSI, 800MPA	up to 25 HRC	**45°**	**835 - 900**	**1050 - 1115**	**1310 - 1380**
P2	**Heat treated steels**	D2, 4140	1.2367, 1.2379, 1.2363, 1.7225	> 116,000 PSI, 800MPA	up to 45 HRC	**30°**	**625 - 690**	**720 - 785**	**950 - 1015**
M1	Stainless steels	303, 304	1.4305, 1.4301, 1.4034	≤ 94,275 PSI, 650MPA		10°	310 - 360*	375 - 445	490 - 560
M2	Stainless steels	316Ti, 316L	1.4571, 1.4404, 1.4418	> 94,275 PSI, 650MPA		5°	245 - 295*	310 - 345	360 - 425
K1	Cast iron	ASTM A48 NO. 30, ASTM A48 NO. 55/60, G1800	0.6020, 0.6040, 0.7040	≤ 65,265 PSI, 450MPA		45°	525 - 590	590 - 655	690 - 755
K2	Cast iron	ASTM A536 80-55-06, ASTMA536 100-70-06	0.7060, 0.7070	> 65,265 PSI, 450MPA		20°	425 - 490	490 - 560	590 - 655
S1	Titanium & titanium alloys	Ti6Al4V	3.7165			10°	165 - 195*	195 - 260	260 - 295
S2	High Temp alloys	Inconel, Nimonic				5°	100 -130	100 -130	100 -130
N1	Wrought aluminum alloys	A5005, A6061, A7075	3.3315			30°	1540 - 1610	1970 - 2065	2560 - 2690
N2	Aluminum cast alloys	A310, A400	3.2581		Si >12%	30°	1115 - 1180	1380 - 1440	1770 - 1900
H1	Hardened steels				45 - 55 HRC	10°	130 - 195	195 -260	195 -260

Cutting data are reference values and need to be adjusted according to the application area.
Chip removal recommended for drilling depth 0.5 – 1 x D.

Feed per tooth (inch/tooth) in relation with D1 and cutting width ae

Ø	3/8	1/2	5/8	3/4	1	1 1/4
fz	0.0011 - 0.0035	0.0011 - 0.0039	0.0016 - 0.0047	0.002 - 0.005	0.0024 - 0.0067	0.0027 - 0.0079

Cutting data is based on short cylindrical extensions, cutting data for long overhang need to be adjusted.

INCH

F2004UK – DUO-LOCK® HAIMER MILL CHAMFER

Technical data and Product characteristics

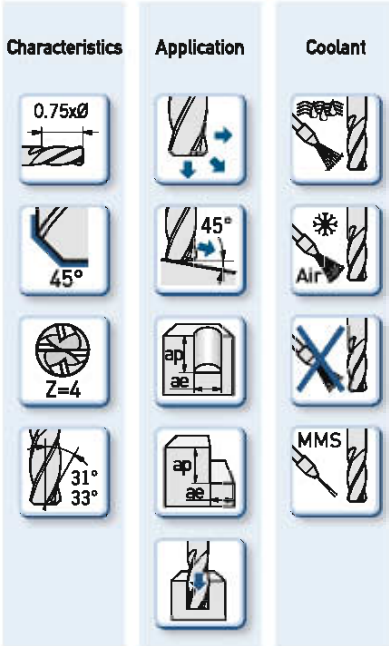

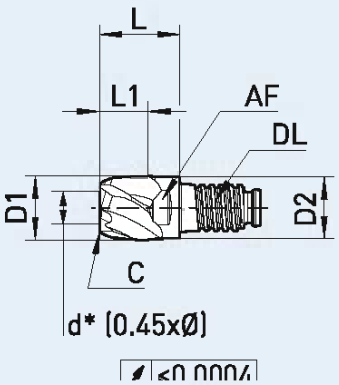

Fine balanced

Material – characteristics

Main Material

P

also suitable for

K S N M H

- Neck for higher cutting depth
- Center cutting
- Unequal cutting edge
- Best length repeatability

Article-Code	HAIMER Quality	Duo-Lock Size	D1 (f9) [inch]	Cutting edge	Size [inch]	L1 max. [inch]	L [inch]	D2 [inch]	AF [inch]	Torque [N/m]
DL10F2004UK3/8ZC..	DA	DL10	3/8	C	0.008	0.295	0.492	0.359	0.315	20
DL12F2004UK1/2ZC..	DA	DL12	1/2	C	0.010	0.354	0.591	0.480	0.374	30
DL16F2004UK5/8ZC..	DA	DL16	5/8	C	0.013	0.472	0.787	0.605	0.512	60
DL20F2004UK3/4ZC..	DA	DL20	3/4	C	0.015	0.591	0.984	0.730	0.630	80
DL25F2004UK1ZC..	DA	DL25	1	C	0.020	0.738	1.230	0.961	0.827	100
DL32F2004UK11/4ZC..	DA	DL32	11/4	C	0.025	0.945	1.575	1.211	1.102	130

Order No. = Article Code + HAIMER Quality

F2006/08/00MN – DUO-LOCK® HAIMER MILL FINISHING CHAMFER

METRIC

Cutting data

HAIMER Material groups		Example material ANSI	Material no.	Material information Tensile strength	Content/ Hardness	Cutting width ap, ae; ae = 5% D1, ap = L1 max. Cutting speed Vc (m/min)
P1	**General construction steels**	A252, A50-2, 1045	1.0038, 1.0050, 1.0503	≤ 800 N/mm²	up to 25 HRC	**220 – 280**
P2	**Heat treated steels**	D2, 4140	1.2367, 1.2379, 1.2363, 1.7225	> 800 N/mm²	up to 45 HRC	**160 – 200**
M1	**Stainless steels**	303, 304	1.4305, 1.4301, 1.4034	≤ 650 N/mm²		**120 – 160**
M2	**Stainless steels**	316Ti, 316L	1.4571, 1.4404, 1.4418	> 650 N/mm²		**90 – 120**
K1	Cast iron	ASTM A48 NO. 30, ASTM A48 NO. 55/60, G1800	0.6020, 0.6040, 0.7040	≤ 450 N/mm²		180 – 240
K2	Cast iron	ASTM A536 80-55-06, ASTMA536 100-70-06	0.7060, 0.7070	> 450 N/mm²		160 – 220
S1	Titanium & titanium alloys	Ti6Al4V	3.7165			40 – 80
S2	High Temp alloys	Inconel, Nimonic		800 – 1700 N/mm²		30 – 40
N1	Wrought aluminum alloys	A5005, A6061, A7075	3.3315		Si < 9%	500 – 900
N2	Aluminum cast alloys	A310, A400	3.2581		Si > 9%	120 – 350
H1	Hardened steels				45 – 55 HRC	60 – 80

Cutting data are reference values and need to be adjusted according to the application area.

Feed per tooth fz (mm/tooth) in relation with D1 and cutting width ae				
ae 5%	ø 10	ø 12	ø 16	ø 20
fz	0.03 – 0.09	0.03 – 0.10	0.04 – 0.12	0.05 – 0.13

Cutting data is based on short cylindrical extensions, cutting data for long overhang need to be adjusted.

METRIC

F2006/08/00MN – DUO-LOCK® HAIMER MILL CHAMFER FINISHING

Technical data and Product characteristics

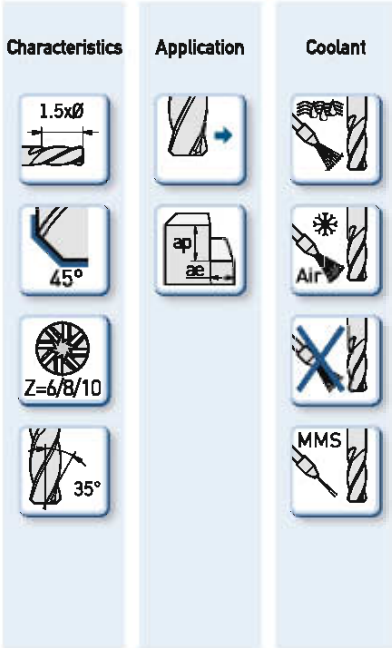

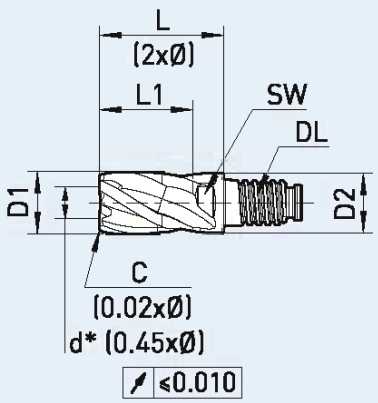

Fine balanced
* diameter not center cutting

Material – characteristics

Main Material P M

also suitable for K S N H

- Neck for higher cutting depth
- Unequal cutting edge
- Best length repeatability

Article-Code	HAIMER Quality	Duo-Lock Size	D1 (f9) [mm]	Cutting edge	No. teeth	Size [mm]	L1 max. [mm]	L [mm]	D2 [mm]	AF [mm]	Torque [N/m]
DL10F2006MN1000C..	DA	DL10	10.00	C	6	0.2	15	20	9.6	SW8	20
DL12F2006MN1200C..	DA	DL12	12.00	C	6	0.24	18	24	11.5	SW9.5	30
DL16F2008MN1600C..	DA	DL16	16.00	C	8	0.32	24	32	15.5	SW13	60
DL20F2000MN2000C..	DA	DL20	20.00	C	10	0.4	30	40	19.3	SW16	80

Order No. = Article Code + HAIMER Quality.

F2006/08/00MN – DUO-LOCK® HAIMER MILL FINISHING CHAMFER

INCH

Cutting data

HAIMER Material groups		Example material ANSI	Material no.	Material information Tensile strength	Content/ Hardness	Cutting width ae = 5% D1 ap = L1 max. Cutting Speed (SFM)
P1	**General construction steels**	A252, A50-2, 1045	1.0038, 1.0050, 1.0503	≤ 116,000 PSI, 800MPA	up to 25 HRC	**725 - 920**
P2	**Heat treated steels**	D2, 4140	1.2367, 1.2379, 1.2363, 1.7225	> 116,000 PSI, 800MPA	up to 45 HRC	**525 - 655**
M1	Stainless steels	303, 304	1.4305, 1.4301, 1.4034	≤ 94,275 PSI, 650MPA		395 - 525
M2	Stainless steels	316Ti, 316L	1.4571, 1.4404, 1.4418	> 94,275 PSI, 650MPA		295 - 395
K1	Cast iron	ASTM A48 NO. 30, ASTM A48 NO. 55/60, G1800	0.6020, 0.6040, 0.7040	≤ 65,265 PSI, 450MPA		590 - 785
K2	Cast iron	ASTM A536 80-55-06, ASTMA536 100-70-06	0.7060, 0.7070	> 65,265 PSI, 450MPA		525 - 720
S1	Titanium & titanium alloys	Ti6Al4V	3.7165			130 - 260
S2	High Temp alloys	Inconel, Nimonic				100 -130
N1	Wrought aluminum alloys	A5005, A6061, A7075	3.3315			1640 -2950
N2	Aluminum cast alloys	A310, A400	3.2581		Si >12%	395 -1150
H1	Hardened steels				45 - 55 HRC	195 -260

Cutting data are reference values and need to be adjusted according to the application area.

Feed per tooth (inch/tooth) in relation with D1 and cutting width ae				
Ø	3/8	1/2	5/8	3/4
fz	0.0011 - 0.0035	0.0011 - 0.0039	0.0016 - 0.0047	0.002 - 0.005

Cutting data is based on short cylindrical extensions, cutting data for long overhang need to be adjusted.

INCH

F2006/08/00MN – DUO-LOCK® HAIMER MILL CHAMFER FINISHING

Technical data and Product characteristics

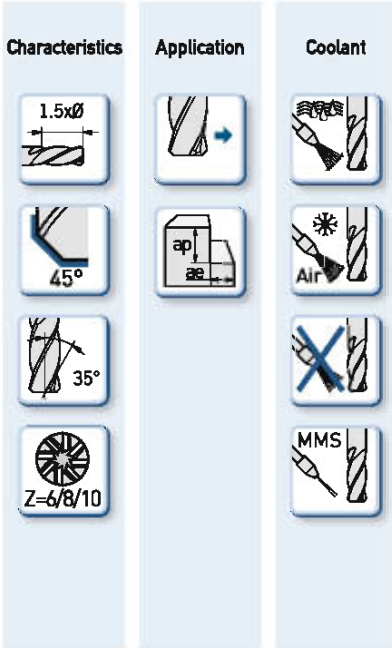

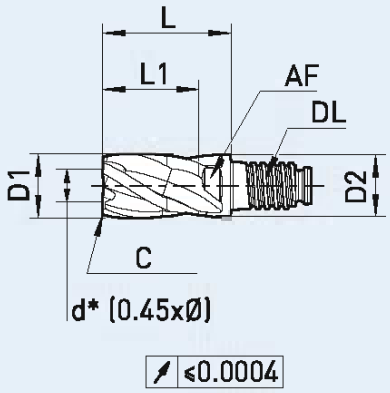

Fine balanced
* diameter not center cutting

Material – characteristics

Main Material

P

also suitable for

K S N M H

- Neck for higher cutting depth
- Unequal cutting edge
- Best length repeatability

Article-Code	HAIMER Quality	Duo-Lock Size	D1 (f9) [inch]	Cutting edge	Size [inch]	Z	L1 max. [inch]	L [inch]	D2 [inch]	AF [inch]	Torque [N/m]
DL10F2006MN3/8ZC..	DA	DL10	3/8	C	0.008	6	0.591	0.787	0.359	0.315	20
DL12F2006MN1/2ZC..	DA	DL12	1/2	C	0.010	6	0.709	0.945	0.480	0.374	30
DL16F2008MN5/8ZC..	DA	DL16	5/8	C	0.013	8	0.945	1.260	0.605	0.512	60
DL20F2000MN3/4ZC..	DA	DL20	3/4	C	0.015	10	1.181	1.575	0.730	0.630	80

Order No. = Article Code + HAIMER Quality

F2006/08/00MN – DUO-LOCK® HAIMER MILL FINISHING CORNER RADIUS

METRIC

Cutting data

HAIMER Material groups		Example material ANSI	Material no.	Material information Tensile strength	Content/ Hardness	Cutting width ae = 5% D1 ap = L1 max. Cutting speed Vc (m/min)
P1	**General construction steels**	A252, A50-2, 1045	1.0038, 1.0050, 1.0503	≤ 800 N/mm²	up to 25 HRC	**220 – 280**
P2	**Heat treated steels**	D2, 4140	1.2367, 1.2379, 1.2363, 1.7225	> 800 N/mm²	up to 45 HRC	**160 – 200**
M1	**Stainless steels**	303, 304	1.4305, 1.4301, 1.4034	≤ 650 N/mm²		**120 – 160**
M2	**Stainless steels**	316Ti, 316L	1.4571, 1.4404, 1.4418	> 650 N/mm²		**90 – 120**
K1	Cast iron	ASTM A48 NO. 30, ASTM A48 NO. 55/60, G1800	0.6020, 0.6040, 0.7040	≤ 450 N/mm²		180 – 240
K2	Cast iron	ASTM A536 80-55-06, ASTMA536 100-70-06	0.7060, 0.7070	> 450 N/mm²		160 – 220
S1	Titanium & titanium alloys	Ti6Al4V	3.7165			40 – 80
S2	High Temp alloys	Inconel, Nimonic		800 – 1700 N/mm²		30 – 40
N1	Wrought aluminum alloys	A5005, A6061, A7075	3.3315		Si < 9%	500 – 900
N2	Aluminum cast alloys	A310, A400	3.2581		Si > 9%	120 – 350
H1	Hardened steels				45 – 55 HRC	60 – 80

Cutting data are reference values and need to be adjusted according to the application area.

Feed per tooth fz (mm/tooth) in relation with D1 and cutting width ae				
ae 5%	ø 10	ø 12	ø 16	ø 20
fz	0.03 – 0.09	0.03 – 0.10	0.04 – 0.12	0.05 – 0.13

Cutting data is based on short cylindrical extensions, cutting data for long overhang need to be adjusted.

METRIC

F2006/08/00MN – DUO-LOCK® HAIMER MILL CORNER RADIUS FINISHING

Technical data and Product characteristics

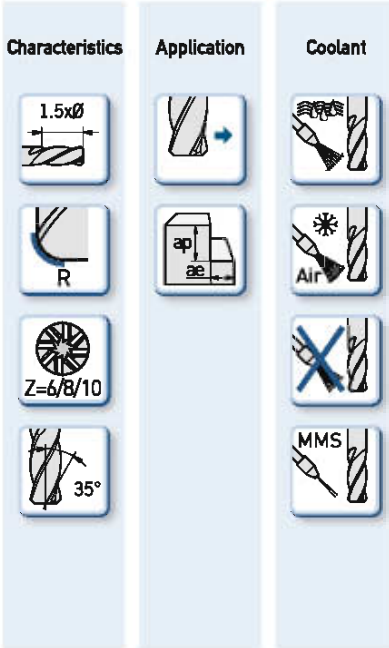

Material – characteristics

Main Material P M

also suitable for K S N H

- Neck for higher cutting depth
- Unequal cutting edge
- Best length repeatability

Article-Code	HAIMER Quality	Duo-Lock Size	D1 (f9) [mm]	Cutting edge	No. teeth	Size [mm]	L1 max. [mm]	L [mm]	D2 [mm]	AF [mm]	Torque [N/m]
DL10F2006MN1000R0.50..	DA	DL10	10.00	R	6	0.50	15	20	9.6	SW8	20
DL10F2006MN1000R1.00..	DA	DL10	10.00	R	6	1.00	15	20	9.6	SW8	20
DL10F2006MN1000R1.50..	DA	DL10	10.00	R	6	1.50	15	20	9.6	SW8	20
DL10F2006MN1000R2.00..	DA	DL10	10.00	R	6	2.00	15	20	9.6	SW8	20
DL12F2006MN1200R0.50..	DA	DL12	12.00	R	6	0.50	18	24	11.5	SW9.5	30
DL12F2006MN1200R1.00..	DA	DL12	12.00	R	6	1.00	18	24	11.5	SW9.5	30
DL12F2006MN1200R2.00..	DA	DL12	12.00	R	6	2.00	18	24	11.5	SW9.5	30
DL16F2008MN1600R0.50..	DA	DL16	16.00	R	8	0.50	24	32	15.5	SW13	60
DL16F2008MN1600R1.00..	DA	DL16	16.00	R	8	1.00	24	32	15.5	SW13	60
DL16F2008MN1600R2.00..	DA	DL16	16.00	R	8	2.00	24	32	15.5	SW13	60
DL16F2008MN1600R4.00..	DA	DL16	16.00	R	8	4.00	24	32	15.5	SW13	60
DL20F2000MN2000R0.50..	DA	DL20	20.00	R	10	0.50	30	40	19.3	SW16	80
DL20F2000MN2000R2.00..	DA	DL20	20.00	R	10	2.00	30	40	19.3	SW16	80
DL20F2000MN2000R4.00..	DA	DL20	20.00	R	10	4.00	30	40	19.3	SW16	80

Order No. = Article Code + HAIMER Quality.

F2006/08/00MN – DUO-LOCK® HAIMER MILL FINISHING CORNER RADIUS

INCH

Cutting data

HAIMER Material groups		Example material ANSI	Material no.	Material information Tensile strength	Content/ Hardness	Cutting width ae = 5% D1 ap = L1 max. Cutting Speed (SFM)
P1	**General construction steels**	A252, A50-2, 1045	1.0038, 1.0050, 1.0503	≤ 116,000 PSI, 800MPA	up to 25 HRC	**725 - 920**
P2	**Heat treated steels**	D2, 4140	1.2367, 1.2379, 1.2363, 1.7225	> 116,000 PSI, 800MPA	up to 45 HRC	**525 - 655**
M1	Stainless steels	303, 304	1.4305, 1.4301, 1.4034	≤ 94,275 PSI, 650MPA		395 - 525
M2	Stainless steels	316Ti, 316L	1.4571, 1.4404, 1.4418	> 94,275 PSI, 650MPA		295 - 395
K1	Cast iron	ASTM A48 NO. 30, ASTM A48 NO. 55/60, G1800	0.6020, 0.6040, 0.7040	≤ 65,265 PSI, 450MPA		590 - 785
K2	Cast iron	ASTM A536 80-55-06, ASTMA536 100-70-06	0.7060, 0.7070	> 65,265 PSI, 450MPA		525 - 720
S1	Titanium & titanium alloys	Ti6Al4V	3.7165			130 - 260
S2	High Temp alloys	Inconel, Nimonic				100 -130
N1	Wrought aluminum alloys	A5005, A6061, A7075	3.3315			1640 -2950
N2	Aluminum cast alloys	A310, A400	3.2581		Si >12%	395 -1150
H1	Hardened steels				45 - 55 HRC	195 -260

Cutting data are reference values and need to be adjusted according to the application area.

Feed per tooth (inch/tooth) in relation with D1 and cutting width ae				
Ø	3/8	1/2	5/8	3/4
fz	0.0011 - 0.0035	0.0011 - 0.0039	0.0016 - 0.0047	0.002 - 0.005

Cutting data is based on short cylindrical extensions, cutting data for long overhang need to be adjusted.

INCH

F2006/08/00MN – DUO-LOCK® HAIMER MILL CORNER RADIUS FINISHING

Technical data and Product characteristics

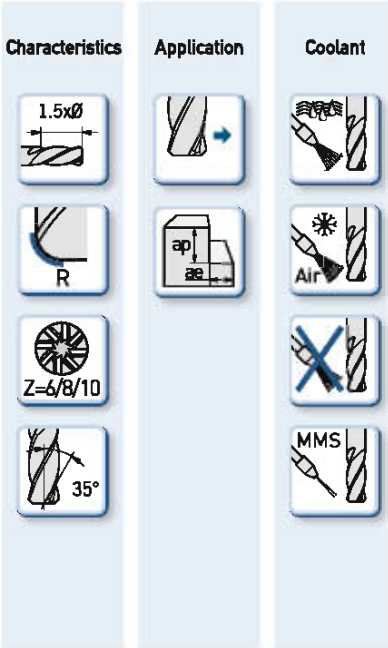

Material – characteristics

Main Material

P

also suitable for

K S N M H

- Neck for higher cutting depth
- Unequal cutting edge
- Best length repeatability

Article-Code	HAIMER Quality	Duo-Lock Size	D1 (f9) [inch]	Cutting edge	Size [inch]	Z	L1 max. [inch]	L [inch]	D2 [inch]	AF [inch]	Torque [N/m]
DL10F2006MN3/8ZR.015..	DA	DL10	3/8	R	0.015	6	0.591	0.787	0.359	0.315	20
DL10F2006MN3/8ZR.030..	DA	DL10	3/8	R	0.030	6	0.591	0.787	0.359	0.315	20
DL10F2006MN3/8ZR.060..	DA	DL10	3/8	R	0.060	6	0.591	0.787	0.359	0.315	20
DL12F2006MN1/2ZR.015..	DA	DL12	1/2	R	0.015	6	0.709	0.945	0.480	0.374	30
DL12F2006MN1/2ZR.030..	DA	DL12	1/2	R	0.030	6	0.709	0.945	0.480	0.374	30
DL12F2006MN1/2ZR.060..	DA	DL12	1/2	R	0.060	6	0.709	0.945	0.480	0.374	30
DL16F2008MN5/8ZR.015..	DA	DL16	5/8	R	0.015	8	0.945	1.260	0.605	0.512	60
DL16F2008MN5/8ZR.030..	DA	DL16	5/8	R	0.030	8	0.945	1.260	0.605	0.512	60
DL16F2008MN5/8ZR.060..	DA	DL16	5/8	R	0.060	8	0.945	1.260	0.605	0.512	60
DL16F2008MN5/8ZR.090..	DA	DL16	5/8	R	0.090	8	0.945	1.260	0.605	0.512	60
DL16F2008MN5/8ZR.125..	DA	DL16	5/8	R	0.125	8	0.945	1.260	0.605	0.512	60
DL20F2000MN3/4ZR.030..	DA	DL20	3/4	R	0.030	10	1.181	1.575	0.730	0.630	80
DL20F2000MN3/4ZR.060..	DA	DL20	3/4	R	0.060	10	1.181	1.575	0.730	0.630	80
DL20F2000MN3/4ZR.090..	DA	DL20	3/4	R	0.090	10	1.181	1.575	0.730	0.630	80
DL20F2000MN3/4ZR.125..	DA	DL20	3/4	R	0.125	10	1.181	1.575	0.730	0.630	80
DL20F2000MN3/4ZR.150..	DA	DL20	3/4	R	0.150	10	1.181	1.575	0.730	0.630	80

Order No. = Article Code + HAIMER Quality

F2006/08/00UK – DUO-LOCK® HAIMER MILL FINISHING CHAMFER

METRIC

Cutting data

HAIMER Material groups		Example material ANSI	Material no.	Material information Tensile strength	Content/ Hardness	Cutting width ae = 5% D1 ap = L1 max. Cutting speed Vc (m/min)
P1	**General construction steels**	A252, A50-2, 1045	1.0038, 1.0050, 1.0503	≤ 800 N/mm²	up to 25 HRC	**220 – 280**
P2	**Heat treated steels**	D2, 4140	1.2367, 1.2379, 1.2363, 1.7225	> 800 N/mm²	up to 45 HRC	**160 – 200**
M1	**Stainless steels**	303, 304	1.4305, 1.4301, 1.4034	≤ 650 N/mm²		**120 – 160**
M2	**Stainless steels**	316Ti, 316L	1.4571, 1.4404, 1.4418	> 650 N/mm²		**90 – 120**
K1	Cast iron	ASTM A48 NO. 30, ASTM A48 NO. 55/60, G1800	0.6020, 0.6040, 0.7040	≤ 450 N/mm²		180 – 240
K2	Cast iron	ASTM A536 80-55-06, ASTMA536 100-70-06	0.7060, 0.7070	> 450 N/mm²		160 – 220
S1	Titanium & titanium alloys	Ti6Al4V	3.7165			40 – 80
S2	High Temp alloys	Inconel, Nimonic		800 – 1700 N/mm²		30 – 40
N1	Wrought aluminum alloys	A5005, A6061, A7075	3.3315		Si < 9%	500 – 900
N2	Aluminum cast alloys	A310, A400	3.2581		Si > 9%	120 – 350
H1	Hardened steels				45 – 55 HRC	60 – 80

Cutting data are reference values and need to be adjusted according to the application area.

Feed per tooth fz (mm/tooth) in relation with D1 and cutting width ae				
ae 5%	ø 10	ø 12	ø 16	ø 20
fz	0.03 – 0.09	0.03 – 0.10	0.04 – 0.12	0.05 – 0.13

Cutting data is based on short cylindrical extensions, cutting data for long overhang need to be adjusted.

METRIC

F2006/08/00UK – DUO-LOCK® HAIMER MILL CHAMFER FINISHING

Technical data and Product characteristics

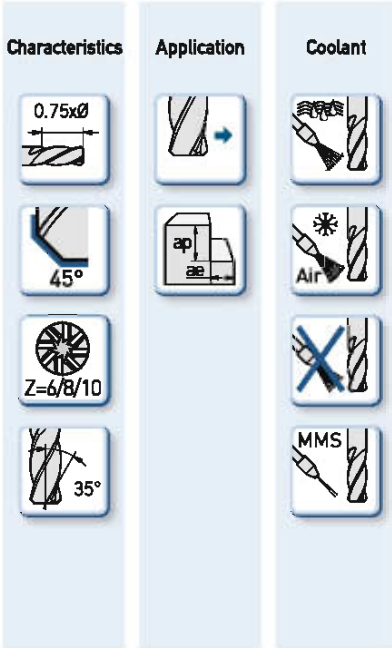

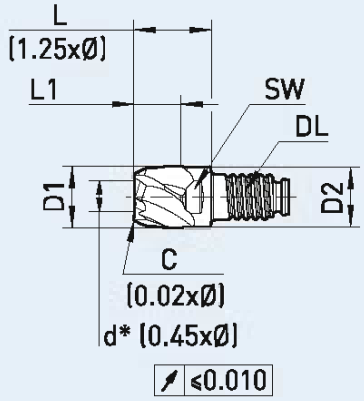

Fine balanced
* diameter not center cutting

Material – characteristics

Main Material P M

also suitable for K S N H

- Neck for higher cutting depth
- Unequal cutting edge
- Best length repeatability

Article-Code	HAIMER Quality	Duo-Lock Size	D1 (f9) [mm]	Cutting edge	No. teeth	Size [mm]	L1 max. [mm]	L [mm]	D2 [mm]	AF [mm]	Torque [N/m]
DL10F2006UK1000C..	DA	DL10	10.00	C	6	0.2	7.5	12.5	9.6	SW8	20
DL12F2006UK1200C..	DA	DL12	12.00	C	6	0.24	9	15	11.5	SW9.5	30
DL16F2008UK1600C..	DA	DL16	16.00	C	8	0.32	12	20	15.5	SW13	60
DL20F2000UK2000C..	DA	DL20	20.00	C	10	0.4	15	25	19.3	SW16	80

Order No. = Article Code + HAIMER Quality.

F2006/08/00UK – DUO-LOCK® HAIMER MILL FINISHING CHAMFER

INCH

Cutting data

HAIMER Material groups		Example material ANSI	Material no.	Material information Tensile strength	Content/ Hardness	Cutting width ae = 5% D1 ap = L1 max. Cutting Speed (SFM)
P1	**General construction steels**	A252, A50-2, 1045	1.0038, 1.0050, 1.0503	≤ 116,000 PSI, 800MPA	up to 25 HRC	**725 - 920**
P2	**Heat treated steels**	D2, 4140	1.2367, 1.2379, 1.2363, 1.7225	> 116,000 PSI, 800MPA	up to 45 HRC	**525 - 655**
M1	Stainless steels	303, 304	1.4305, 1.4301, 1.4034	≤ 94,275 PSI, 650MPA		395 - 525
M2	Stainless steels	316Ti, 316L	1.4571, 1.4404, 1.4418	> 94,275 PSI, 650MPA		295 - 395
K1	Cast iron	ASTM A48 NO. 30, ASTM A48 NO. 55/60, G1800	0.6020, 0.6040, 0.7040	≤ 65,265 PSI, 450MPA		590 - 785
K2	Cast iron	ASTM A536 80-55-06, ASTMA536 100-70-06	0.7060, 0.7070	> 65,265 PSI, 450MPA		525 - 720
S1	Titanium & titanium alloys	Ti6Al4V	3.7165			130 - 260
S2	High Temp alloys	Inconel, Nimonic				100 -130
N1	Wrought aluminum alloys	A5005, A6061, A7075	3.3315			1640 -2950
N2	Aluminum cast alloys	A310, A400	3.2581		Si >12%	395 -1150
H1	Hardened steels				45 - 55 HRC	195 -260

Cutting data are reference values and need to be adjusted according to the application area.

Feed per tooth (inch/tooth) in relation with D1 and cutting width ae				
Ø	3/8	1/2	5/8	3/4
fz	0.0011 - 0.0035	0.0011 - 0.0039	0.0016 - 0.0047	0.002 - 0.005

Cutting data is based on short cylindrical extensions, cutting data for long overhang need to be adjusted.

INCH

F2006/08/00UK – DUO-LOCK® HAIMER MILL CHAMFER FINISHING

Technical data and Product characteristics

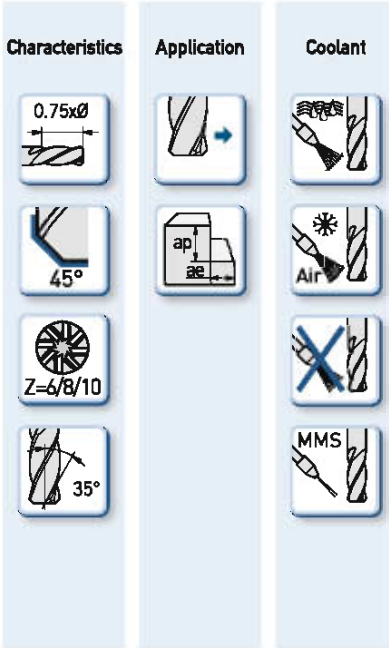

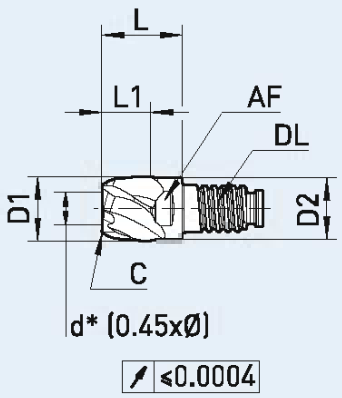

Fine balanced
* diameter not center cutting

Material – characteristics

Main Material

P

also suitable for

K S N M H

- Neck for higher cutting depth
- Unequal cutting edge
- Best length repeatability

Article-Code	HAIMER Quality	Duo-Lock Size	D1 (f9) [inch]	Cutting edge	Size [inch]	Z	L1 max. [inch]	L [inch]	D2 [inch]	AF [inch]	Torque [N/m]
DL10F2006UK3/8ZC..	DA	DL10	3/8	C	0.008	6	0.295	0.492	0.359	0.315	20
DL12F2006UK1/2ZC..	DA	DL12	1/2	C	0.010	6	0.354	0.591	0.480	0.374	30
DL16F2008UK5/8ZC..	DA	DL16	5/8	C	0.013	8	0.472	0.787	0.605	0.512	60
DL20F2000UK3/4ZC..	DA	DL20	3/4	C	0.015	10	0.591	0.984	0.730	0.630	80

Order No. = Article Code + HAIMER Quality

F2304MN – DUO-LOCK® HAIMER MILL CHAMFER ROUGHING

METRIC

Cutting data

HAIMER Material groups		Example material		Material information			
		ANSI	Material no.	Tensile strength	Content/ Hardness	Roughing Vc (m/min)	Finishing Vc (m/min)
P1	**General construction steels**	A252, A50-2, 1045	1.0038, 1.0050, 1.0503	≤ 800 N/mm²	up to 25 HRC	**160 – 220**	**220 – 280**
P2	**Heat treated steels**	D2, 4140	1.2367, 1.2379, 1.2363, 1.7225	> 800 N/mm²	up to 45 HRC	**120 – 160**	**160 – 200**
M1	Stainless steels	303, 304	1.4305, 1.4301, 1.4034	≤ 650 N/mm²		80 – 120	120 – 160
K1	Cast iron	ASTM A48 NO. 30, ASTM A48 NO. 55/60, G1800	0.6020, 0.6040, 0.7040	≤ 450 N/mm²		120 – 180	180 – 240
K2	Cast iron	ASTM A536 80-55-06, ASTMA536 100-70-06	0.7060, 0.7070	> 450 N/mm²		80 – 160	160 – 220
S1	Titanium & titanium alloys	Ti6Al4V	3.7165			40 – 80	40 – 80
N1	Wrought aluminum alloys	A5005, A6061, A7075	3.3315		Si < 9%	500 – 900	500 – 900
N2	Aluminum cast alloys	A310, A400	3.2581		Si > 9%	120 – 350	120 – 350

Cutting data are reference values and need to be adjusted according to the application area.

Feed per tooth fz (mm/tooth) in relation with D1 and cutting width ae				
	ø 10	ø 12	ø 16	ø 20
fz	0.03 – 0.09	0.03 – 0.10	0.04 – 0.12	0.05 – 0.13

Cutting data is based on short cylindrical extensions, cutting data for long overhang need to be adjusted.

METRIC

F2304MN – DUO-LOCK® HAIMER MILL CHAMFER ROUGHING

Technical data and Product characteristics

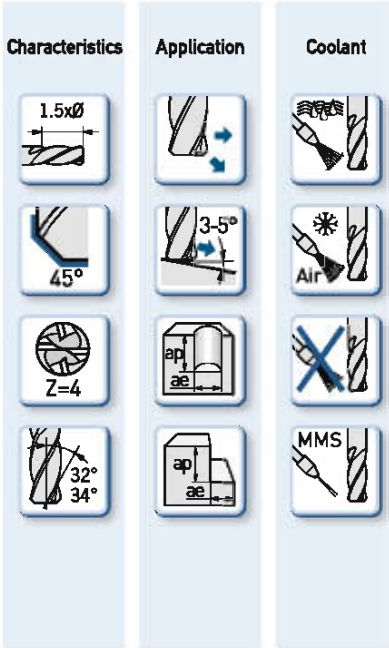

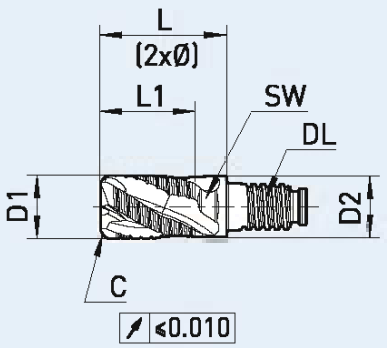

Fine balanced

Material – characteristics

Main Material

P

also suitable for

K S N M

- Neck for higher cutting depth
- Center cutting
- Unequal cutting edge
- Best length repeatability

Article-Code	HAIMER Quality	Duo-Lock Size	D1 (f9) [mm]	Cutting edge	Size [mm]	L1 max. [mm]	L [mm]	D2 [mm]	AF [mm]	Torque [N/m]
DL10F2304MN1000C..	DA	DL10	10.00	C	0.30	15	20	9.6	SW8	20
DL12F2304MN1200C..	DA	DL12	12.00	C	0.30	18	24	11.5	SW9.5	30
DL16F2304MN1600C..	DA	DL16	16.00	C	0.50	24	32	15.5	SW13	60
DL20F2304MN2000C..	DA	DL20	20.00	C	0.60	30	40	19.3	SW16	80

Order No. = Article Code + HAIMER Quality.

Cutting data

HAIMER Material groups		Example material ANSI	Material no.	Material information Tensile strength	Content/ Hardness	Cutting width Roughing Cutting Speed (SFM)	Finishing
P1	**General construction steels**	A252, A50-2, 1045	1.0038, 1.0050, 1.0503	≤ 116,000 PSI, 800MPA	up to 25 HRC	**525 - 725**	**725 - 920**
P2	**Heat treated steels**	D2, 4140	1.2367, 1.2379, 1.2363, 1.7225	> 116,000 PSI, 800MPA	up to 45 HRC	**395 - 525**	**525 - 655**
M1	Stainless steels	303, 304	1.4305, 1.4301, 1.4034	≤ 94,275 PSI, 650MPA		260 - 395	395 - 525
K1	Cast iron	ASTM A48 NO. 30, ASTM A48 NO. 55/60, G1800	0.6020, 0.6040, 0.7040	≤ 65,265 PSI, 450MPA		395 - 590	590 - 785
K2	Cast iron	ASTM A536 80-55-06, ASTMA536 100-70-06	0.7060, 0.7070	> 65,265 PSI, 450MPA		260 - 525	525 - 720
S1	Titanium & titanium alloys	Ti6Al4V	3.7165			130 - 260	130 - 260
N1	Wrought aluminum alloys	A5005, A6061, A7075	3.3315			1640 -2950	1640 -2950
N2	Aluminum cast alloys	A310, A400	3.2581		Si >12%	395 -1150	395 -1150

Cutting data are reference values and need to be adjusted according to the application area.

Feed per tooth (inch/tooth) in relation with D1 and cutting width ae				
Ø	3/8	1/2	5/8	3/4
fz	0.0011 - 0.0035	0.0011 - 0.0039	0.0016 - 0.0047	0.002 - 0.005

Cutting data is based on short cylindrical extensions, cutting data for long overhang need to be adjusted.

INCH

F2304MN – DUO-LOCK® HAIMER MILL ROUGHING

Technical data and Product characteristics

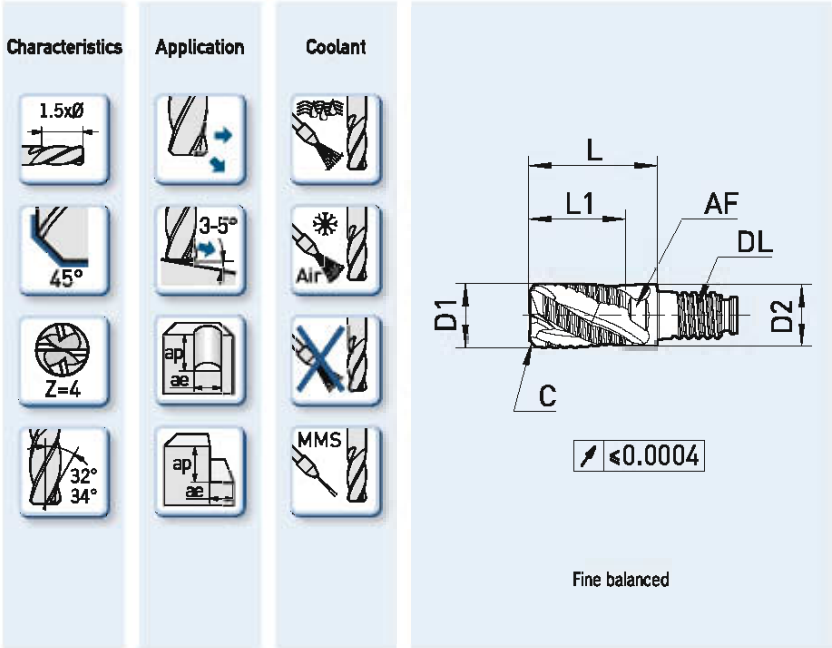

Material – characteristics

Main Material

P

also suitable for

K S N M

- Neck for higher cutting depth
- Center cutting
- Unequal cutting edge
- Best length repeatability

Article-Code	HAIMER Quality	Duo-Lock Size	D1 (f9) [inch]	Cutting edge	Size [inch]	L1 max. [inch]	L [inch]	D2 [inch]	AF [inch]	Torque [N/m]
DL10F2304MN3/8ZC..	DA	DL10	3/8	C	0.012	0.591	0.787	0.359	0.315	20
DL12F2304MN1/2ZC..	DA	DL12	1/2	C	0.012	0.709	0.945	0.480	0.374	30
DL16F2304MN5/8ZC..	DA	DL16	5/8	C	0.020	0.945	1.260	0.605	0.512	60
DL20F2304MN3/4ZC..	DA	DL20	3/4	C	0.024	1.181	1.575	0.730	0.630	80

Order No. = Article Code + HAIMER Quality

F2304UK – DUO-LOCK® HAIMER MILL CHAMFER ROUGHING

METRIC

Cutting data

HAIMER Material groups		Example material		Material information			
		ANSI	Material no.	Tensile strength	Content/ Hardness	Roughing Vc (m/min)	Finishing Vc (m/min)
P1	**General construction steels**	A252, A50-2, 1045	1.0038, 1.0050, 1.0503	≤ 800 N/mm²	up to 25 HRC	**160 – 220**	**220 – 280**
P2	**Heat treated steels**	D2, 4140	1.2367, 1.2379, 1.2363, 1.7225	> 800 N/mm²	up to 45 HRC	**120 – 160**	**160 – 200**
M1	Stainless steels	303, 304	1.4305, 1.4301, 1.4034	≤ 650 N/mm²		80 – 120	120 – 160
K1	Cast iron	ASTM A48 NO. 30, ASTM A48 NO. 55/60, G1800	0.6020, 0.6040, 0.7040	≤ 450 N/mm²		120 – 180	180 – 240
K2	Cast iron	ASTM A536 80-55-06, ASTMA536 100-70-06	0.7060, 0.7070	> 450 N/mm²		80 – 160	160 – 220
S1	Titanium & titanium alloys	Ti6Al4V	3.7165			40 – 80	40 – 80
N1	Wrought aluminum alloys	A5005, A6061, A7075	3.3315		Si < 9%	500 – 900	500 – 900
N2	Aluminum cast alloys	A310, A400	3.2581		Si > 9%	120 – 350	120 – 350

Cutting data are reference values and need to be adjusted according to the application area.

Feed per tooth fz (mm/tooth) in relation with D1 and cutting width ae				
	ø 10	ø 12	ø 16	ø 20
fz	0.03 – 0.09	0.03 – 0.10	0.04 – 0.12	0.05 – 0.13

Cutting data is based on short cylindrical extensions, cutting data for long overhang need to be adjusted.

METRIC

F2304UK – DUO-LOCK® HAIMER MILL CHAMFER ROUGHING

Technical data and Product characteristics

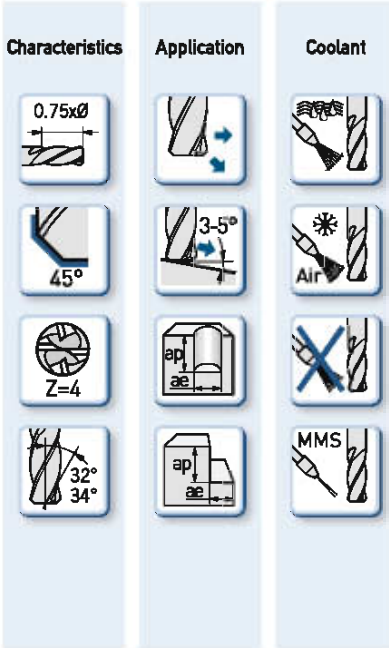

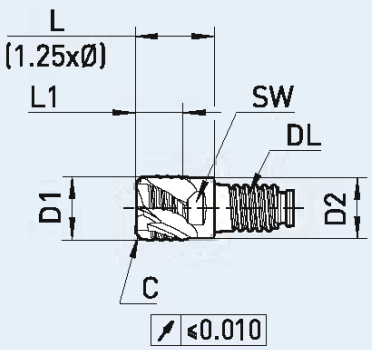

Fine balanced

Material – characteristics

Main Material

P

also suitable for

K S N M

- Neck for higher cutting depth
- Center cutting
- Unequal cutting edge
- Best length repeatability

Article-Code	HAIMER Quality	Duo-Lock Size	D1 (f9) [mm]	Cutting edge	Size [mm]	L1 max. [mm]	L [mm]	D2 [mm]	AF [mm]	Torque [N/m]
DL10F2304UK1000C..	DA	DL10	10.00	C	0.30	7.5	12.5	9.6	SW8	20
DL12F2304UK1200C..	DA	DL12	12.00	C	0.30	9	15	11.5	SW9.5	30
DL16F2304UK1600C..	DA	DL16	16.00	C	0.50	12	20	15.5	SW13	60
DL20F2304UK2000C..	DA	DL20	20.00	C	0.60	15	25	19.3	SW16	80

Order No. = Article Code + HAIMER Quality.

Cutting data

HAIMER Material groups		Example material ANSI	Material no.	Material information Tensile strength	Content/ Hardness	Cutting width Roughing Cutting Speed (SFM)	Finishing
P1	**General construction steels**	A252, A50-2, 1045	1.0038, 1.0050, 1.0503	≤ 116,000 PSI, 800MPA	up to 25 HRC	**525 - 725**	**725 - 920**
P2	**Heat treated steels**	D2, 4140	1.2367, 1.2379, 1.2363, 1.7225	> 116,000 PSI, 800MPA	up to 45 HRC	**395 - 525**	**525 - 655**
M1	Stainless steels	303, 304	1.4305, 1.4301, 1.4034	≤ 94,275 PSI, 650MPA		260 - 395	395 - 525
K1	Cast iron	ASTM A48 NO. 30, ASTM A48 NO. 55/60, G1800	0.6020, 0.6040, 0.7040	≤ 65,265 PSI, 450MPA		395 - 590	590 - 785
K2	Cast iron	ASTM A536 80-55-06, ASTMA536 100-70-06	0.7060, 0.7070	> 65,265 PSI, 450MPA		260 - 525	525 - 720
S1	Titanium & titanium alloys	Ti6Al4V	3.7165			130 - 260	130 - 260
N1	Wrought aluminum alloys	A5005, A6061, A7075	3.3315			1640 -2950	1640 -2950
N2	Aluminum cast alloys	A310, A400	3.2581		Si >12%	395 -1150	395 -1150

Cutting data are reference values and need to be adjusted according to the application area.

Feed per tooth (inch/tooth) in relation with D1 and cutting width ae				
Ø	3/8	1/2	5/8	3/4
fz	0.0011 - 0.0035	0.0011 - 0.0039	0.0016 - 0.0047	0.002 - 0.005

Cutting data is based on short cylindrical extensions, cutting data for long overhang need to be adjusted.

INCH

F2304UK – DUO-LOCK® HAIMER MILL ROUGHING

Technical data and Product characteristics

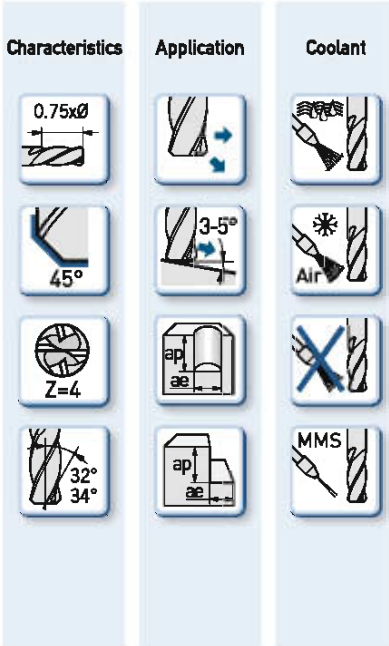

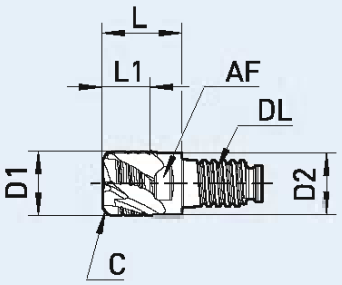

≤0.0004

Fine balanced

Material – characteristics

Main Material

P

also suitable for

K S N M

- Neck for higher cutting depth
- Center cutting
- Unequal cutting edge
- Best length repeatability

Article-Code	HAIMER Quality	Duo-Lock Size	D1 (f9) [inch]	Cutting edge	Size [inch]	L1 max. [inch]	L [inch]	D2 [inch]	AF [inch]	Torque [N/m]
DL10F2304UK3/8ZC..	DA	DL10	3/8	C	0.012	0.295	0.492	0.359	0.315	20
DL12F2304UK1/2ZC..	DA	DL12	1/2	C	0.012	0.354	0.591	0.480	0.374	30
DL16F2304UK5/8ZC..	DA	DL16	5/8	C	0.020	0.472	0.787	0.605	0.512	60
DL20F2304UK3/4ZC..	DA	DL20	3/4	C	0.024	0.591	0.984	0.730	0.630	80

Order No. = Article Code + HAIMER Quality

F4002MN – DUO-LOCK® HAIMER MILL Alu Series CHAMFER UNCOATED

METRIC

Cutting data

HAIMER Material groups		Example material		Material information			
		ANSI	Material no.	Tensile strength	Content/ Hardness	Roughing Vc (m/min)	Finishing Vc (m/min)
N1	**Wrought aluminum alloys**	A5005, A6061, A7075	3.3315		Si < 9%	**300 – 400**	**400 – 500**
N2	**Aluminum cast alloys**	A310, A400	3.2581		Si > 9%		

Cutting data are reference values and need to be adjusted according to the application area.

Feed per tooth fz (mm/tooth) in relation with D1 and cutting width ae				
	ø 10	ø 12	ø 16	ø 20
fz	0.03 – 0.09	0.03 – 0.10	0.04 – 0.12	0.05 – 0.13

Cutting data is based on short cylindrical extensions, cutting data for long overhang need to be adjusted.

METRIC

F4002MN – DUO-LOCK® HAIMER MILL Alu Series CHAMFER UNCOATED

Technical data and Product characteristics

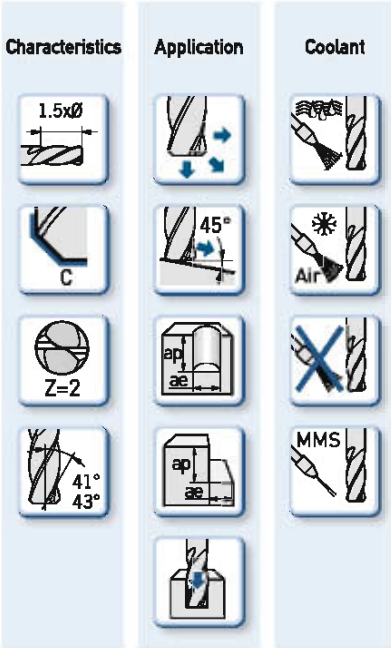

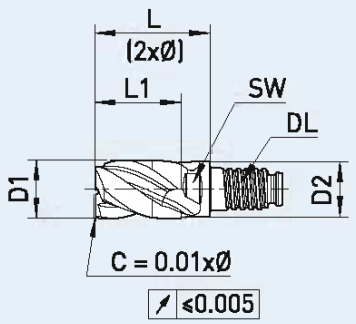

Fine balanced

Material – characteristics

Main Material

N

- Neck for higher cutting depth
- Center cutting
- Polished flute and relief
- Best length repeatability
- Uncoated

Article-Code	HAIMER Quality	Duo-Lock Size	D1 (h9) [mm]	Cutting edge	Size [mm]	L1 max. [mm]	L [mm]	D2 [mm]	AF [mm]	Torque [N/m]
DL10F4002MN1000C..	D-	DL10	10.00	C	0.1	15	20	9.6	SW8	20
DL12F4002MN1200C..	D-	DL12	12.00	C	0.12	18	24	11.5	SW9.5	30
DL16F4002MN1600C..	D-	DL16	16.00	C	0.16	24	32	15.5	SW13	60
DL20F4002MN2000C..	D-	DL20	20.00	C	0.2	30	40	19.3	SW16	80

Order No. = Article Code + HAIMER Quality.

Cutting data

HAIMER Material groups		Example material		Material information			
		ANSI	Material no.	Tensile strength	Content/ Hardness	Roughing Vc (m/min)	Finishing Vc (m/min)
N1	**Wrought aluminum alloys**	A5005, A6061, A7075	3.3315		Si < 9%	**300 – 400**	**400 – 500**
N2	**Aluminum cast alloys**	A310, A400	3.2581		Si > 9%		

Cutting data are reference values and need to be adjusted according to the application area.

Feed per tooth fz (mm/tooth) in relation with D1 and cutting width ae				
	ø 10	ø 12	ø 16	ø 20
fz	0.03 – 0.09	0.03 – 0.10	0.04 – 0.12	0.05 – 0.13

Cutting data is based on short cylindrical extensions, cutting data for long overhang need to be adjusted.

METRIC

F4002MN – DUO-LOCK® HAIMER MILL Alu Series CHAMFER

Technical data and Product characteristics

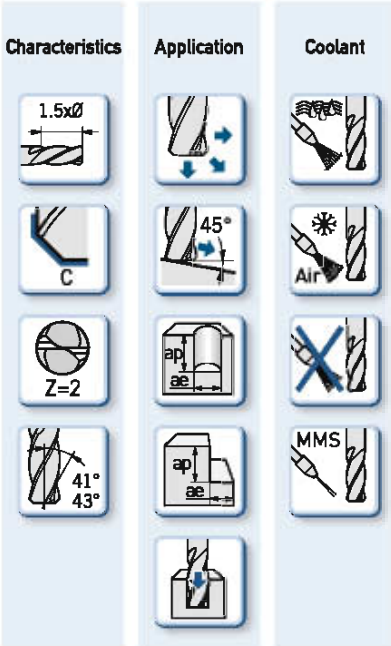

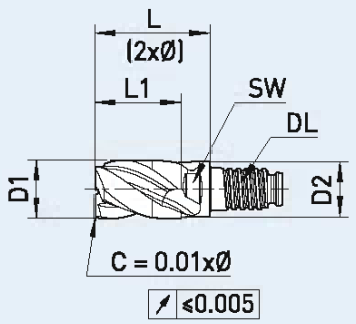

Fine balanced

Material – characteristics

Main Material

N

- Coating for abrasive materials
- Neck for higher cutting depth
- Center cutting
- Polishsd flute and relief
- Best length repeatability

Article-Code	HAIMER Quality	Duo-Lock Size	D1 (h9) [mm]	Cutting edge	Size [mm]	L1 max. [mm]	L [mm]	D2 [mm]	AF [mm]	Torque [N/m]
DL10F4002MN1000C..	DC	DL10	10.00	C	0.1	15	20	9.6	SW8	20
DL12F4002MN1200C..	DC	DL12	12.00	C	0.12	18	24	11.5	SW9.5	30
DL16F4002MN1600C..	DC	DL16	16.00	C	0.16	24	32	15.5	SW13	60
DL20F4002MN2000C..	DC	DL20	20.00	C	0.2	30	40	19.3	SW16	80

Order No. = Article Code + HAIMER Quality.

F4003MN – DUO-LOCK® HAIMER MILL Alu Series CHAMFER UNCOATED

METRIC

Cutting data

HAIMER Material groups		Example material ANSI	Material no.	Material information Tensile strength	Content/ Hardness	Roughing Vc (m/min)	Finishing Vc (m/min)
N1	**Wrought aluminum alloys**	A5005, A6061, A7075	3.3315		Si < 9%	**300 – 400**	**400 – 500**
N2	**Aluminum cast alloys**	A310, A400	3.2581		Si > 9%		

Cutting data are reference values and need to be adjusted according to the application area.

Feed per tooth fz (mm/tooth) in relation with D1 and cutting width ae				
	ø 10	ø 12	ø 16	ø 20
fz	0.03 – 0.09	0.03 – 0.10	0.04 – 0.12	0.05 – 0.13

Cutting data is based on short cylindrical extensions, cutting data for long overhang need to be adjusted.

METRIC

F4003MN – DUO-LOCK® HAIMER MILL Alu Series CHAMFER UNCOATED

Technical data and Product characteristics

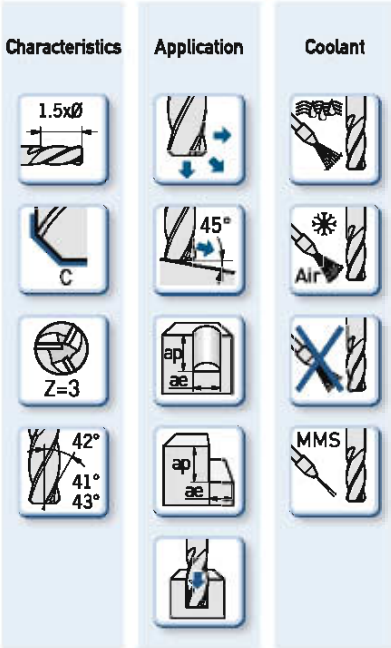

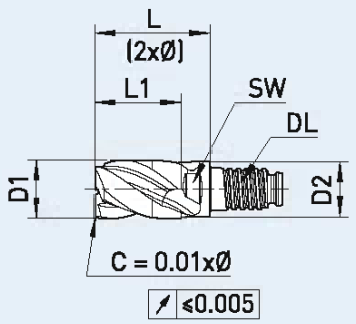

Fine balanced

Material – characteristics

Main Material

N

- Neck for higher cutting depth
- Center cutting
- Polished flute and relief
- Best length repeatability
- Uncoated

Article-Code	HAIMER Quality	Duo-Lock Size	D1 (h9) [mm]	Cutting edge	Size [mm]	L1 max. [mm]	L [mm]	D2 [mm]	AF [mm]	Torque [N/m]
DL10F4003MN1000C..	D-	DL10	10.00	C	0.1	15	20	9.6	SW8	20
DL12F4003MN1200C..	D-	DL12	12.00	C	0.12	18	24	11.5	SW9.5	30
DL16F4003MN1600C..	D-	DL16	16.00	C	0.16	24	32	15.5	SW13	60
DL20F4003MN2000C..	D-	DL20	20.00	C	0.2	30	40	19.3	SW16	80

Order No. = Article Code + HAIMER Quality.

F4003MN – DUO-LOCK® HAIMER MILL Alu Series CHAMFER

METRIC

Cutting data

HAIMER Material groups		Example material		Material information			
		ANSI	Material no.	Tensile strength	Content/ Hardness	Roughing Vc (m/min)	Finishing Vc (m/min)
N1	**Wrought aluminum alloys**	A5005, A6061, A7075	3.3315		Si < 9%	**300 – 400**	**400 – 500**
N2	**Aluminum cast alloys**	A310, A400	3.2581		Si > 9%		

Cutting data are reference values and need to be adjusted according to the application area.

Feed per tooth fz (mm/tooth) in relation with D1 and cutting width ae				
	ø 10	ø 12	ø 16	ø 20
fz	0.03 – 0.09	0.03 – 0.10	0.04 – 0.12	0.05 – 0.13

Cutting data is based on short cylindrical extensions, cutting data for long overhang need to be adjusted.

METRIC

F4003MN – DUO-LOCK® HAIMER MILL Alu Series CHAMFER

Technical data and Product characteristics

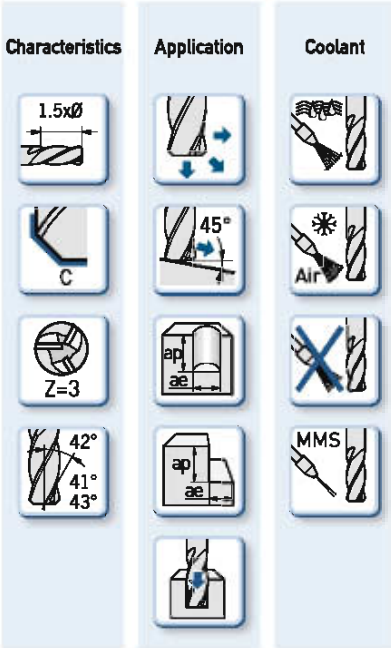

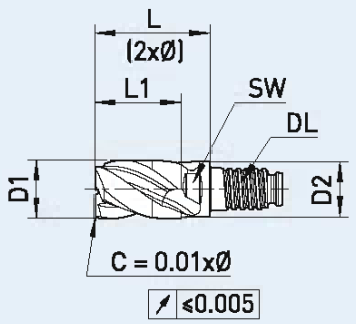

Fine balanced

Material – characteristics

Main Material

N

- Coating for abrasive materials
- Neck for higher cutting depth
- Center cutting
- Polishsd flute and relief
- Best length repeatability

Article-Code	HAIMER Quality	Duo-Lock Size	D1 (h9) [mm]	Cutting edge	Size [mm]	L1 max. [mm]	L [mm]	D2 [mm]	AF [mm]	Torque [N/m]
DL10F4003MN1000C..	DC	DL10	10.00	C	0.1	15	20	9.6	SW8	20
DL12F4003MN1200C..	DC	DL12	12.00	C	0.12	18	24	11.5	SW9.5	30
DL16F4003MN1600C..	DC	DL16	16.00	C	0.16	24	32	15.5	SW13	60
DL20F4003MN2000C..	DC	DL20	20.00	C	0.2	30	40	19.3	SW16	80

Order No. = Article Code + HAIMER Quality.

Cutting data

HAIMER Material groups		Example material		Material information			
		ANSI	Material no.	Tensile strength	Content/ Hardness	Roughing Vc (m/min)	Finishing Vc (m/min)
P1	**General construction steels**	A252, A50-2, 1045	1.0038. 1.0050. 1.0503	≤ 800 N/mm²	up to 25 HRC	**250 – 320**	**340 – 420**
P2	**Heat treated steels**	D2, 4140	1.2367. 1.2379. 1.2363. 1.7225	> 800 N/mm²	up to 45 HRC	**190 – 220**	**240 – 310**
M1	Stainless steels	303, 304	1.4305. 1.4301. 1.4034	≤ 650 N/mm²		95 – 115	135 – 170
M2	Stainless steels	316Ti, 316L	1.4571. 1.4404. 1.4418	> 650 N/mm²		75 – 95	105 – 130
K1	Cast iron	ASTM A48 NO. 30, ASTM A48 NO. 55/60, G1800	0.6020. 0.6040. 0.7040	≤ 450 N/mm²		160 – 180	200 – 230
K2	Cast iron	ASTM A536 80-55-06, ASTMA536 100-70-06	0.7060. 0.7070	> 450 N/mm²		130 – 150	170 – 200
S1	Titanium & titanium alloys	Ti6Al4V	3.7165			50 – 60	80 – 90
S2	High Temp alloys	Inconel, Nimonic		800 – 1700 N/mm²		30 – 40	30 – 40
N1	Wrought aluminum alloys	A5005, A6061, A7075	3.3315		Si < 9%	500 – 900	500 – 900
N2	Aluminum cast alloys	A310, A400	3.2581		Si > 9%	120 – 350	120 – 350
H1	Hardened steels				45 – 55 HRC	40 – 60	60 – 80

Cutting data are reference values and need to be adjusted according to the application area.

Feed per tooth fz (mm/tooth) in relation with D1 and cutting width ae				
	ø 10	ø 12	ø 16	ø 20
fz	0.1 – 0.3	0.12 – 0.36	0.16 – 0.48	0.2 – 0.6
ap HFC	0.75	0.9	1.2	1.5

Cutting data is based on short cylindrical extensions, cutting data for long overhang need to be adjusted.

METRIC

H2004UK – DUO-LOCK® HAIMER MILL HF Series HIGH FEED

Technical data and Product characteristics

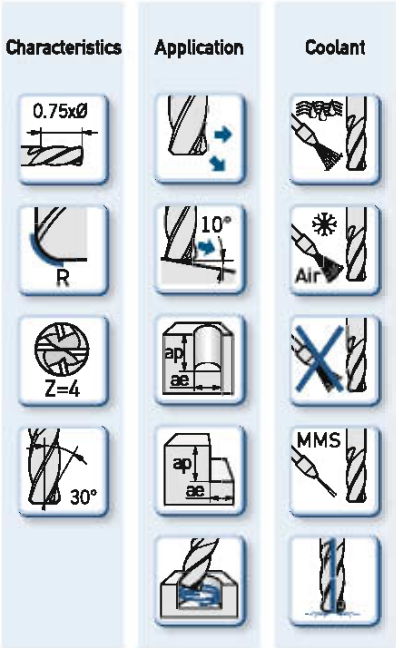

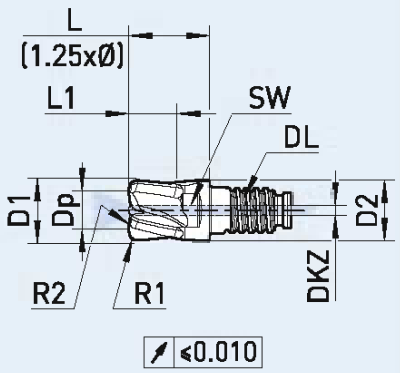

Material – characteristics

Main Material

P

also suitable for

K S N M H

- Central inner cooling
- Neck for higher cutting depth
- Best length repeatability

Article-Code	HAIMER Quality	Duo-Lock Size	D1 (f9) [mm]	Cutting edge	R1 [mm]	R2 [mm]	Dp [mm]	L1 max. [mm]	L [mm]	DKZ [mm]	D2 [mm]	AF [mm]	Torque [N/m]
DL10H2004UK1000R..	DAKZ	DL10	10.00	R	1.5	5	6	7.5	12.5	2	9.6	SW8	20
DL12H2004UK1200R..	DAKZ	DL12	12.00	R	1.8	6	7.2	9	15	2	11.5	SW9.5	30
DL16H2004UK1600R..	DAKZ	DL16	16.00	R	2.4	8	9.6	12	20	2	15.5	SW13	60
DL20H2004UK2000R..	DAKZ	DL20	20.00	R	3	10	12	15	25	3	19.3	SW16	80

Order No. = Article Code + HAIMER Quality.

Cutting data

HAIMER Material groups		Example material		Material information			
		ANSI	Material no.	Tensile strength	Content/ Hardness	Roughing Vc (m/min)	Finishing Vc (m/min)
P1	**General construction steels**	A252, A50-2, 1045	1.0038. 1.0050. 1.0503	≤ 800 N/mm²	up to 25 HRC	**250 – 320**	**340 – 420**
P2	**Heat treated steels**	D2, 4140	1.2367. 1.2379. 1.2363. 1.7225	> 800 N/mm²	up to 45 HRC	**190 – 220**	**240 – 310**
M1	Stainless steels	303, 304	1.4305. 1.4301. 1.4034	≤ 650 N/mm²		95 – 115	135 – 170
M2	Stainless steels	316Ti, 316L	1.4571. 1.4404. 1.4418	> 650 N/mm²		75 – 95	105 – 130
K1	Cast iron	ASTM A48 NO. 30, ASTM A48 NO. 55/60, G1800	0.6020. 0.6040. 0.7040	≤ 450 N/mm²		160 – 180	200 – 230
K2	Cast iron	ASTM A536 80-55-06, ASTMA536 100-70-06	0.7060. 0.7070	> 450 N/mm²		130 – 150	170 – 200
S1	Titanium & titanium alloys	Ti6Al4V	3.7165			50 – 60	80 – 90
S2	High Temp alloys	Inconel, Nimonic		800 – 1700 N/mm²		30 – 40	30 – 40
N1	Wrought aluminum alloys	A5005, A6061, A7075	3.3315		Si < 9%	500 – 900	500 – 900
N2	Aluminum cast alloys	A310, A400	3.2581		Si > 9%	120 – 350	120 – 350
H1	Hardened steels				45 – 55 HRC	40 – 60	60 – 80

Cutting data are reference values and need to be adjusted according to the application area.

Feed per tooth fz (mm/tooth) in relation with D1 and cutting width ae				
	ø 10	ø 12	ø 16	ø 20
fz	0.1 – 0.3	0.12 – 0.36	0.16 – 0.48	0.2 – 0.6
ap HFC	0.75	0.9	1.2	1.5

Cutting data is based on short cylindrical extensions, cutting data for long overhang need to be adjusted.

H2006UK – DUO-LOCK® HAIMER MILL HF Series HIGH FEED

METRIC

Technical data and Product characteristics

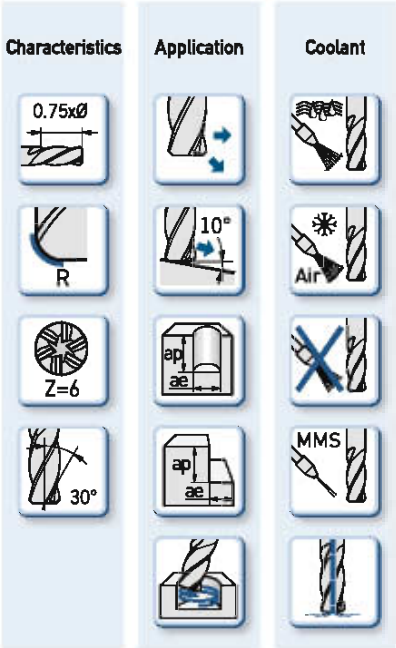

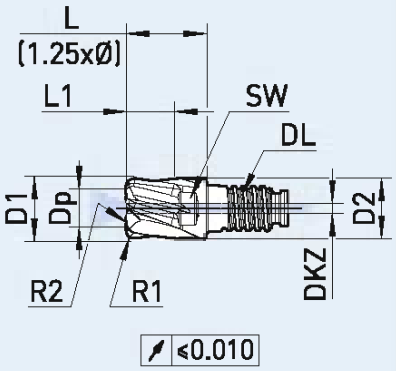

Fine balanced

Material – characteristics

Main Material

P

also suitable for

K S N M H

- Central inner cooling
- Neck for higher cutting depth
- Best length repeatability

Article-Code	HAIMER Quality	Duo-Lock Size	D1 (f9) [mm]	Cutting edge	R1 [mm]	R2 [mm]	Dp [mm]	L1 max. [mm]	L [mm]	DKZ [mm]	D2 [mm]	AF [mm]	Torque [N/m]
DL10H2006UK1000R..	DPKZ	DL10	10.00	R	1.5	5	6	7.5	12.5	2	9.6	SW8	20
DL12H2006UK1200R..	DPKZ	DL12	12.00	R	1.8	6	7.2	9	15	2	11.5	SW9.5	30
DL16H2006UK1600R..	DPKZ	DL16	16.00	R	2.4	8	9.6	12	20	2	15.5	SW13	60
DL20H2006UK2000R..	DPKZ	DL20	20.00	R	3	10	12	15	25	3	19.3	SW16	80

Order No. = Article Code + HAIMER Quality.

V2002MN – DUO-LOCK® HAIMER MILL BALL NOSE

METRIC

Cutting data

HAIMER Material groups		Example material ANSI	Material no.	Material information Tensile strength	Content/ Hardness	Roughing Vc (m/min)	Finishing Vc (m/min)
P1	**General construction steels**	A252, A50-2, 1045	1.0038, 1.0050, 1.0503	≤ 800 N/mm²	up to 25 HRC	**160 – 220**	**220 – 280**
P2	**Heat treated steels**	D2, 4140	1.2367, 1.2379, 1.2363, 1.7225	> 800 N/mm²	up to 45 HRC	**120 – 160**	**160 – 200**
M1	Stainless steels	303, 304	1.4305, 1.4301, 1.4034	≤ 650 N/mm²		80 – 120	120 – 160
M2	Stainless steels	316Ti, 316L	1.4571, 1.4404, 1.4418	> 650 N/mm²		60 – 90	90 – 120
K1	Cast iron	ASTM A48 NO. 30, ASTM A48 NO. 55/60, G1800	0.6020, 0.6040, 0.7040	≤ 450 N/mm²		120 – 180	180 – 240
K2	Cast iron	ASTM A536 80-55-06, ASTMA536 100-70-06	0.7060, 0.7070	> 450 N/mm²		80 – 160	160 – 220
S1	Titanium & titanium alloys	Ti6Al4V	3.7165			40 – 80	40 – 80
S2	High Temp alloys	Inconel, Nimonic		800 – 1700 N/mm²		30 – 40	30 – 40
N1	Wrought aluminum alloys	A5005, A6061, A7075	3.3315		Si < 9%	500 – 900	500 – 900
N2	Aluminum cast alloys	A310, A400	3.2581		Si > 9%	120 – 350	120 – 350
H1	Hardened steels				45 – 55 HRC	40 – 60	60 – 80

Cutting data are reference values and need to be adjusted according to the application area.

Feed per tooth fz (mm/tooth) in relation with D1 and cutting width ae								
	ø 2	ø 2,5	ø 3	ø 4	ø 5	ø 6	ø 8	ø 10
fz	0.006 – 0.018	0.008 – 0.023	0.009 – 0.027	0.012 – 0.036	0.015 – 0.045	0.018 – 0.054	0.024 – 0.072	0.03 – 0.09

Cutting data is based on short cylindrical extensions, cutting data for long overhang need to be adjusted.

METRIC

V2002MN – DUO-LOCK® HAIMER MILL BALL NOSE

Technical data and Product characteristics

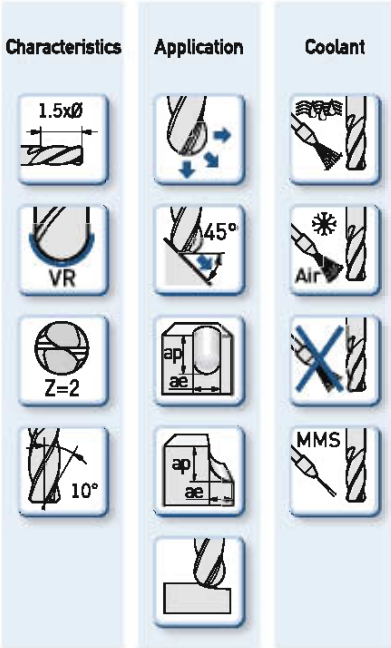

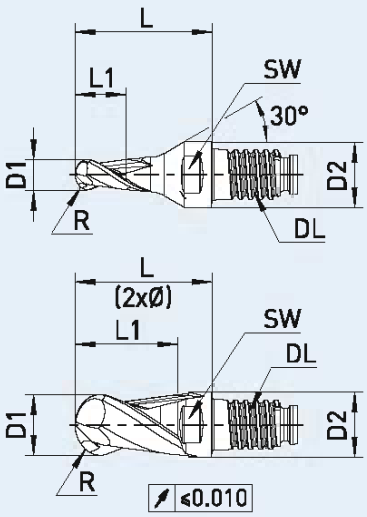

Material – characteristics

Main Material

P

also suitable for

K S N M H

- Neck for higher cutting depth
- Ball Nose
- Best length repeatability

Article-Code	HAIMER Quality	Duo-Lock Size	D1 (f9) [mm]	Cutting edge	Radius [mm]	L1 max. [mm]	L [mm]	D2 [mm]	AF [mm]	Torque [N/m]
DL10V2002MN0200R..	DA	DL10	2.00	R	1.00	3.0	20	9.6	SW8	20
DL10V2002MN0250R..	DA	DL10	2.50	R	1.25	3.75	20	9.6	SW8	20
DL10V2002MN0300R..	DA	DL10	3.00	R	1.50	4.5	20	9.6	SW8	20
DL10V2002MN0400R..	DA	DL10	4.00	R	2.00	6.0	20	9.6	SW8	20
DL10V2002MN0500R..	DA	DL10	5.00	R	2.50	7.5	20	9.6	SW8	20
DL10V2002MN0600R..	DA	DL10	6.00	R	3.00	9.0	20	9.6	SW8	20
DL10V2002MN0800R..	DA	DL10	8.00	R	4.00	12	20	9.6	SW8	20
DL10V2002MN1000R..	DA	DL10	10.00	R	5.00	15	20	9.6	SW8	20

Order No. = Article Code + HAIMER Quality.

V2002UK – DUO-LOCK® HAIMER MILL BALL NOSE

METRIC

Cutting data

HAIMER Material groups		Example material ANSI	Material no.	Material information Tensile strength	Content/ Hardness	Roughing Vc (m/min)	Finishing Vc (m/min)
P1	**General construction steels**	A252, A50-2, 1045	1.0038, 1.0050, 1.0503	≤ 800 N/mm²	up to 25 HRC	**160 – 220**	**220 – 280**
P2	**Heat treated steels**	D2, 4140	1.2367, 1.2379, 1.2363, 1.7225	> 800 N/mm²	up to 45 HRC	**120 – 160**	**160 – 200**
M1	Stainless steels	303, 304	1.4305, 1.4301, 1.4034	≤650 N/mm²		80 – 120	120 – 160
M2	Stainless steels	316Ti, 316L	1.4571, 1.4404, 1.4418	> 650 N/mm²		60 – 90	90 – 120
K1	Cast iron	ASTM A48 NO. 30, ASTM A48 NO. 55/60, G1800	0.6020, 0.6040, 0.7040	≤ 450 N/mm²		120 – 180	180 – 240
K2	Cast iron	ASTM A536 80-55-06, ASTMA536 100-70-06	0.7060, 0.7070	> 450 N/mm²		80 – 160	160 – 220
S1	Titanium & titanium alloys	Ti6Al4V	3.7165			40 – 80	40 – 80
S2	High Temp alloys	Inconel, Nimonic		800 – 1700 N/mm²		30 – 40	30 – 40
N1	Wrought aluminum alloys	A5005, A6061, A7075	3.3315		Si < 9%	500 – 900	500 – 900
N2	Aluminum cast alloys	A310, A400	3.2581		Si > 9%	120 – 350	120 – 350
H1	Hardened steels				45 – 55 HRC	40 – 60	60 – 80

Cutting data are reference values and need to be adjusted according to the application area.

Feed per tooth fz (mm/tooth) in relation with D1 and cutting width ae				
	ø 10	ø 12	ø 16	ø 20
fz	0.03 – 0.09	0.03 – 0.10	0.04 – 0.12	0.05 – 0.13

Cutting data is based on short cylindrical extensions, cutting data for long overhang need to be adjusted.

V2002UK – DUO-LOCK® HAIMER MILL BALL NOSE

METRIC

Technical data and Product characteristics

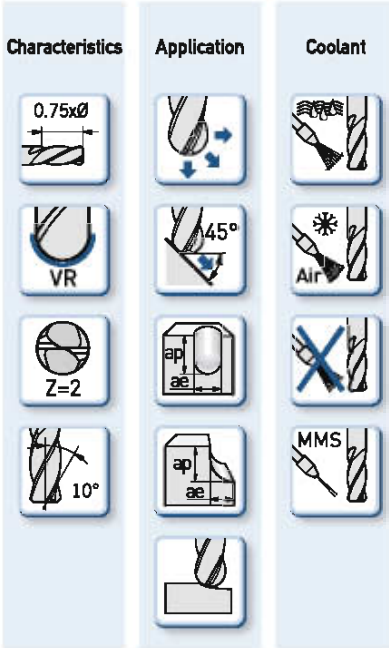

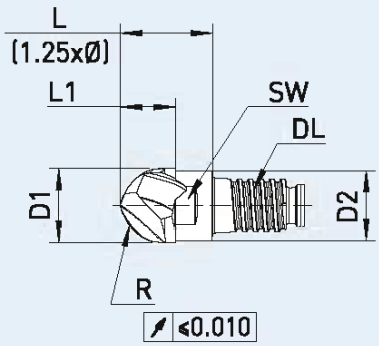

Fine balanced

Material – characteristics

Main Material

P

also suitable for

K S N M H

- Neck for higher cutting depth
- Ball Nose
- Best length repeatability

Article-Code	HAIMER Quality	Duo-Lock Size	D1 (f9) [mm]	Cutting edge	Radius [mm]	L1 max. [mm]	L [mm]	D2 [mm]	AF [mm]	Torque [N/m]
DL10V2002UK1000R..	DA	DL10	10.00	R	5.00	7.5	12.5	9.6	SW8	20
DL12V2002UK1200R..	DA	DL12	12.00	R	6.00	9	15	11.5	SW9.5	30
DL16V2002UK1600R..	DA	DL16	16.00	R	8.00	12	20	15.5	SW13	60
DL20V2002UK2000R..	DA	DL20	20.00	R	10.00	15	25	19.3	SW16	80

Order No. = Article Code + HAIMER Quality.

V2002UK – DUO-LOCK® HAIMER MILL BALL NOSE

INCH

Cutting data

HAIMER Material groups		Example material ANSI	Material no.	Material information Tensile strength	Content/ Hardness	Cutting width Roughing Cutting Speed (SFM)	Finishing
P1	**General construction steels**	A252, A50-2, 1045	1.0038, 1.0050, 1.0503	≤ 116,000 PSI, 800MPA	up to 25 HRC	**525 - 725**	**725 - 920**
P2	**Heat treated steels**	D2, 4140	1.2367, 1.2379, 1.2363, 1.7225	> 116,000 PSI, 800MPA	up to 45 HRC	**395 - 525**	**525 - 655**
M1	Stainless steels	303, 304	1.4305, 1.4301, 1.4034	≤ 94,275 PSI, 650MPA		260 - 395	395 - 525
M2	Stainless steels	316Ti, 316L	1.4571, 1.4404, 1.4418	> 94,275 PSI, 650MPA		195 - 295	295 - 395
K1	Cast iron	ASTM A48 NO. 30, ASTM A48 NO. 55/60, G1800	0.6020, 0.6040, 0.7040	≤ 65,265 PSI, 450MPA		395 - 590	590 - 785
K2	Cast iron	ASTM A536 80-55-06, ASTMA536 100-70-06	0.7060, 0.7070	> 65,265 PSI, 450MPA		260 - 525	525 - 720
S1	Titanium & titanium alloys	Ti6Al4V	3.7165			130 - 260	130 - 260
S2	High Temp alloys	Inconel, Nimonic				100 -130	100 -130
N1	Wrought aluminum alloys	A5005, A6061, A7075	3.3315			1640 -2950	1640 -2950
N2	Aluminum cast alloys	A310, A400	3.2581		Si >12%	395 -1150	395 -1150
H1	Hardened steels				45 - 55 HRC	130 - 195	195 -260

Cutting data are reference values and need to be adjusted according to the application area.

Feed per tooth (inch/tooth) in relation with D1 and cutting width ae				
Ø	3/8	1/2	5/8	3/4
fz	0.0011 - 0.0035	0.0011 - 0.0039	0.0016 - 0.0047	0.002 - 0.005

Cutting data is based on short cylindrical extensions, cutting data for long overhang need to be adjusted.

INCH

V2002UK – DUO-LOCK® HAIMER MILL BALL NOSE

Technical data and Product characteristics

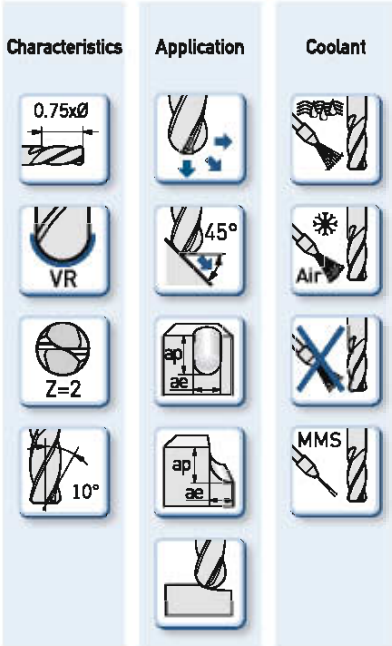

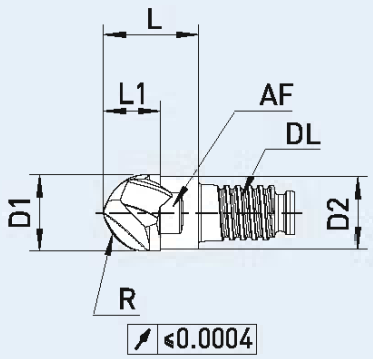

Fine balanced

Material – characteristics

Main Material

P

also suitable for

K S N M H

- Neck for higher cutting depth
- Ball Nose
- Best length repeatability

Article-Code	HAIMER Quality	Duo-Lock Size	D1 (f9) [inch]	Cutting edge	Size [inch]	L1 max. [inch]	L [inch]	D2 [inch]	AF [inch]	Torque [N/m]
DL10V2002UK3/8ZR..	DA	DL10	3/8	R	3/16	0.1875	0.492	0.359	0.315	20
DL12V2002UK1/2ZR..	DA	DL12	1/2	R	1/4	0.250	0.591	0.480	0.374	30
DL16V2002UK5/8ZR..	DA	DL16	5/8	R	5/16	0.3125	0.787	0.605	0.512	60
DL20V2002UK3/4ZR..	DA	DL20	3/4	R	3/8	0.375	0.984	0.730	0.630	80

Order No. = Article Code + HAIMER Quality

V2004MN – DUO-LOCK® HAIMER MILL BALL NOSE

METRIC

Cutting data

HAIMER Material groups		Example material ANSI	Material no.	Material information Tensile strength	Content/ Hardness	Roughing Vc (m/min)	Finishing Vc (m/min)
P1	**General construction steels**	A252, A50-2, 1045	1.0038, 1.0050, 1.0503	≤ 800 N/mm²	up to 25 HRC	**160 – 220**	**220 – 280**
P2	**Heat treated steels**	D2, 4140	1.2367, 1.2379, 1.2363, 1.7225	> 800 N/mm²	up to 45 HRC	**120 – 160**	**160 – 200**
M1	Stainless steels	303, 304	1.4305, 1.4301, 1.4034	≤ 650 N/mm²		80 – 120	120 – 160
M2	Stainless steels	316Ti, 316L	1.4571, 1.4404, 1.4418	> 650 N/mm²		60 – 90	90 – 120
K1	Cast iron	ASTM A48 NO. 30, ASTM A48 NO. 55/60, G1800	0.6020, 0.6040, 0.7040	≤ 450 N/mm²		120 – 180	180 – 240
K2	Cast iron	ASTM A536 80-55-06, ASTMA536 100-70-06	0.7060, 0.7070	> 450 N/mm²		80 – 160	160 – 220
S1	Titanium & titanium alloys	Ti6Al4V	3.7165			40 – 80	40 – 80
S2	High Temp alloys	Inconel, Nimonic		800 – 1700 N/mm²		30 – 40	30 – 40
N1	Wrought aluminum alloys	A5005, A6061, A7075	3.3315		Si < 9%	500 – 900	500 – 900
N2	Aluminum cast alloys	A310, A400	3.2581		Si > 9%	120 – 350	120 – 350
H1	Hardened steels				45 – 55 HRC	40 – 60	60 – 80

Cutting data are reference values and need to be adjusted according to the application area.

Feed per tooth fz (mm/tooth) in relation with D1 and cutting width ae								
	ø 2	ø 2,5	ø 3	ø 4	ø 5	ø 6	ø 8	ø 10
fz	0.006 – 0.018	0.008 – 0.023	0.009 – 0.027	0.012 – 0.036	0.015 – 0.045	0.018 – 0.054	0.024 – 0.072	0.03 – 0.09

Cutting data is based on short cylindrical extensions, cutting data for long overhang need to be adjusted.

V2004MN – DUO-LOCK® HAIMER MILL BALL NOSE

METRIC

Technical data and Product characteristics

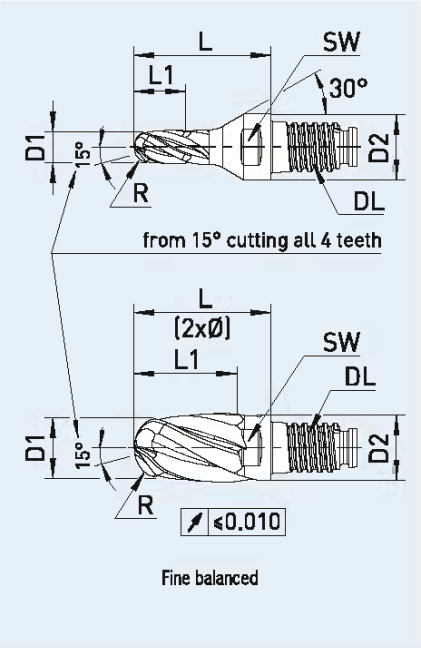

Material – characteristics

Main Material

P

also suitable for

K S N M H

- Neck for higher cutting depth
- Ball Nose
- Best length repeatability

Article-Code	HAIMER Quality	Duo-Lock Size	D1 (f9) [mm]	Cutting edge	Radius [mm]	L1 max. [mm]	L [mm]	D2 [mm]	AF [mm]	Torque [N/m]
DL10V2004MN0200R..	DA	DL10	2.00	R	1.00	3.0	20	9.6	SW8	20
DL10V2004MN0250R..	DA	DL10	2.50	R	1.25	3.75	20	9.6	SW8	20
DL10V2004MN0300R..	DA	DL10	3.00	R	1.50	4.5	20	9.6	SW8	20
DL10V2004MN0400R..	DA	DL10	4.00	R	2.00	6.0	20	9.6	SW8	20
DL10V2004MN0500R..	DA	DL10	5.00	R	2.50	7.5	20	9.6	SW8	20
DL10V2004MN0600R..	DA	DL10	6.00	R	3.00	9.0	20	9.6	SW8	20
DL10V2004MN0800R..	DA	DL10	8.00	R	4.00	12	20	9.6	SW8	20
DL10V2004MN1000R..	DA	DL10	10.00	R	5.00	15	20	9.6	SW8	20

Order No. = Article Code + HAIMER Quality.

V2004UK – DUO-LOCK® HAIMER MILL BALL NOSE

METRIC

Cutting data

HAIMER Material groups		Example material ANSI	Material no.	Material information Tensile strength	Content/ Hardness	Roughing Vc (m/min)	Finishing Vc (m/min)
P1	**General construction steels**	A252, A50-2, 1045	1.0038, 1.0050, 1.0503	≤ 800 N/mm²	up to 25 HRC	**160 – 220**	**220 – 280**
P2	**Heat treated steels**	D2, 4140	1.2367, 1.2379, 1.2363, 1.7225	> 800 N/mm²	up to 45 HRC	**120 – 160**	**160 – 200**
M1	Stainless steels	303, 304	1.4305, 1.4301, 1.4034	≤ 650 N/mm²		80 – 120	120 – 160
M2	Stainless steels	316Ti, 316L	1.4571, 1.4404, 1.4418	> 650 N/mm²		60 – 90	90 – 120
K1	Cast iron	ASTM A48 NO. 30, ASTM A48 NO. 55/60, G1800	0.6020, 0.6040, 0.7040	≤ 450 N/mm²		120 – 180	180 – 240
K2	Cast iron	ASTM A536 80-55-06, ASTMA536 100-70-06	0.7060, 0.7070	> 450 N/mm²		80 – 160	160 – 220
S1	Titanium & titanium alloys	Ti6Al4V	3.7165			40 – 80	40 – 80
S2	High Temp alloys	Inconel, Nimonic		800 – 1700 N/mm²		30 – 40	30 – 40
N1	Wrought aluminum alloys	A5005, A6061, A7075	3.3315		Si < 9%	500 – 900	500 – 900
N2	Aluminum cast alloys	A310, A400	3.2581		Si > 9%	120 – 350	120 – 350
H1	Hardened steels				45 – 55 HRC	40 – 60	60 – 80

Cutting data are reference values and need to be adjusted according to the application area.

Feed per tooth fz (mm/tooth) in relation with D1 and cutting width ae				
	ø 10	**ø 12**	**ø 16**	**ø 20**
fz	0.03 – 0.09	0.03 – 0.10	0.04 – 0.12	0.05 – 0.13

Cutting data is based on short cylindrical extensions, cutting data for long overhang need to be adjusted.

V2004UK – DUO-LOCK® HAIMER MILL BALL NOSE

METRIC

Technical data and Product characteristics

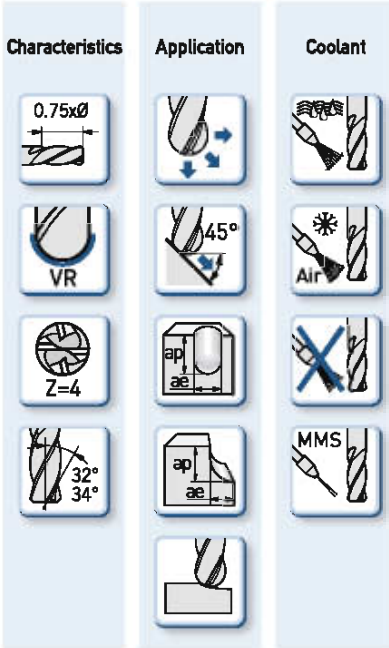

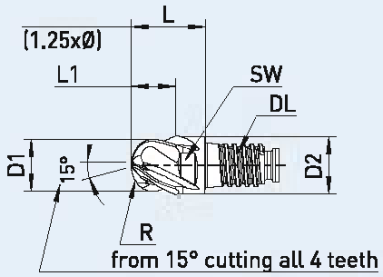

≤0.010

Fine balanced

Material – characteristics

Main Material

P

also suitable for

K S N M H

- Neck for higher cutting depth
- Ball Nose
- Best length repeatability

Article-Code	HAIMER Quality	Duo-Lock Size	D1 (f9) [mm]	Cutting edge	Radius [mm]	L1 max. [mm]	L [mm]	D2 [mm]	AF [mm]	Torque [N/m]
DL10V2004UK1000R..	DA	DL10	10.00	R	5.00	7.5	12.5	9.6	SW8	20
DL12V2004UK1200R..	DA	DL12	12.00	R	6.00	9	15	11.5	SW9.5	30
DL16V2004UK1600R..	DA	DL16	16.00	R	8.00	12	20	15.5	SW13	60
DL20V2004UK2000R..	DA	DL20	20.00	R	10.00	15	25	19.3	SW16	80

Order No. = Article Code + HAIMER Quality.

V4002UK – DUO-LOCK® HAIMER MILL Alu Series BALL NOSE UNCOATED

METRIC

Cutting data

HAIMER Material groups		Example material		Material information			
		ANSI	Material no.	Tensile strength	Content/ Hardness	Roughing Vc (m/min)	Finishing Vc (m/min)
N1	**Wrought aluminum alloys**	A5005, A6061, A7075	3.3315		Si < 9%	**300 – 400**	**400 – 500**
N2	**Aluminum cast alloys**	A310, A400	3.2581		Si > 9%		

Cutting data are reference values and need to be adjusted according to the application area.

Feed per tooth fz (mm/tooth) in relation with D1 and cutting width ae				
	ø 10	ø 12	ø 16	ø 20
fz	0.03 – 0.09	0.03 – 0.10	0.04 – 0.12	0.05 – 0.13

Cutting data is based on short cylindrical extensions, cutting data for long overhang need to be adjusted.

METRIC

V4002UK – DUO-LOCK® HAIMER MILL Alu Series BALL NOSE UNCOATED

Technical data and Product characteristics

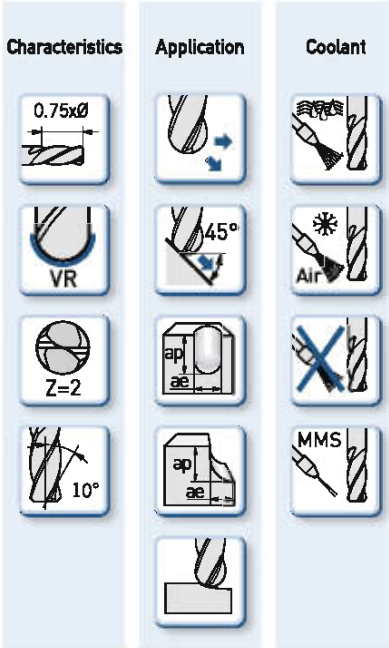

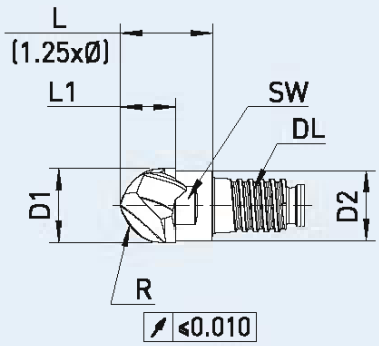

Fine balanced

Material – characteristics

Main Material

N

- Neck for higher cutting depth
- Center cutting
- Polished flute and relief
- Best length repeatability
- Uncoated

Article-Code	HAIMER Quality	Duo-Lock Size	D1 (h9) [mm]	Cutting edge	Size [mm]	L1 max. [mm]	L [mm]	D2 [mm]	AF [mm]	Torque [N/m]
DL10V4002UK1000R..	D-	DL10	10.00	R	5.00	7.5	12.5	9.6	SW8	20
DL12V4002UK1200R..	D-	DL12	12.00	R	6.00	9	15	11.5	SW9.5	30
DL16V4002UK1600R..	D-	DL16	16.00	R	8.00	12	20	15.5	SW13	60
DL20V4002UK2000R..	D-	DL20	20.00	R	10.00	15	25	19.3	SW16	80

Order No. = Article Code + HAIMER Quality.

Cutting data

HAIMER Material groups		Example material		Material information			
		ANSI	Material no.	Tensile strength	Content/ Hardness	Roughing Vc (m/min)	Finishing Vc (m/min)
N1	**Wrought aluminum alloys**	A5005, A6061, A7075	3.3315		Si < 9%	**300 – 400**	**400 – 500**
N2	**Aluminum cast alloys**	A310, A400	3.2581		Si > 9%		

Cutting data are reference values and need to be adjusted according to the application area.

Feed per tooth fz (mm/tooth) in relation with D1 and cutting width ae				
	ø 10	ø 12	ø 16	ø 20
fz	0.03 – 0.09	0.03 – 0.10	0.04 – 0.12	0.05 – 0.13

Cutting data is based on short cylindrical extensions, cutting data for long overhang need to be adjusted.

METRIC

V4002UK – DUO-LOCK® HAIMER MILL Alu Series BALL NOSE

Technical data and Product characteristics

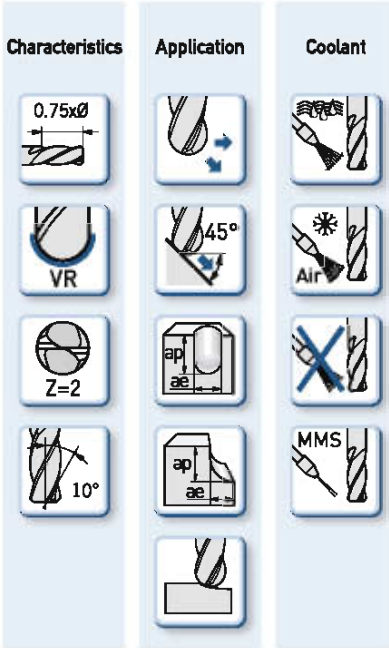

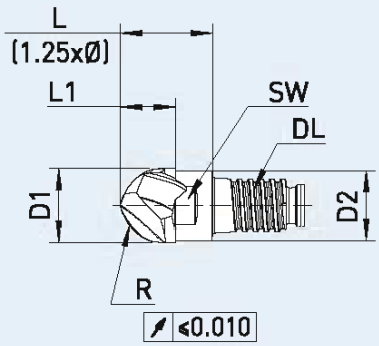

Fine balanced

Material – characteristics

Main Material

N

- Coating for abrasive materials
- Neck for higher cutting depth
- Center cutting
- Polishsd flute and relief
- Best length repeatability

Article-Code	HAIMER Quality	Duo-Lock Size	D1 (h9) [mm]	Cutting edge	Size [mm]	L1 max. [mm]	L [mm]	D2 [mm]	AF [mm]	Torque [N/m]
DL10V4002UK1000R..	DC	DL10	10.00	R	5.00	7.5	12.5	9.6	SW8	20
DL12V4002UK1200R..	DC	DL12	12.00	R	6.00	9	15	11.5	SW9.5	30
DL16V4002UK1600R..	DC	DL16	16.00	R	8.00	12	20	15.5	SW13	60
DL20V4002UK2000R..	DC	DL20	20.00	R	10.00	15	25	19.3	SW16	80

Order No. = Article Code + HAIMER Quality.